CKD

New Products **New Product**

Pencil Shaped Cylinder SCP*3 Series

PENCIL SHAPED CYLINDER SCP*3 SERIES

Renewal!

Compact standard switch "T Series" used for space saving!

Switch height is 1/2

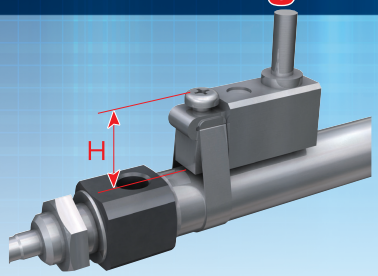

<SCP*2 M type switch>

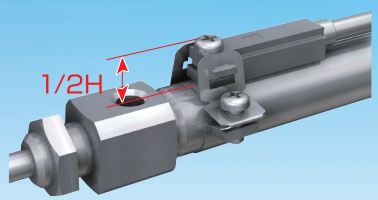

<SCP*3 T type switch>

Compatible with SCP*2 Series

Rod-end thread mounting dimensions are interchangeable with the SCP*2.

SCP*3 product variation

Series variation		Bore size	Stroke length (mm) 15	30	45	60
Double acting, single rod type	SCPD3	φ6/10/16	●	●	●	●
Single acting, extend type	SCPS3	φ6/10/16	●	●	●	●
Single acting, retract type	SCPH3	φ6/10/16	●	●	●	●
Double acting heat resistant type	SCPD3-T	φ6/10/16	●	●	●	●
Double acting rubber cushioned	SCPD3-*C	φ6/10/16	●	●	●	●

Series variation		Bore size	Stroke length (mm) 15	30	45	60
Double acting fine speed type	SCPD3-F	φ6/10/16	●	●	●	●
Double acting low speed type	SCPD3-O	φ6/10/16	●	●	●	●
Double acting double rod type	SCPD3-D	φ6/10/16	●	●	●	●
Single acting non-rotating type	SCPS3-M	φ10/16	●	●	●	●
Double acting non-rotating type	SCPD3-M	φ10/16	●	●	●	●

CKD Corporation

Series variation

Pencil shaped cylinder SCP*3 Series

Variation	Model no. / JIS symbol	Bore size (mm)	Standard stroke length (mm) 15	30	45	60
Double acting, single rod type	SCPD3 SCPD3-L	ø6	●	●	●	●
		ø10	●	●	●	●
		ø16	●	●	●	●
Single acting, extend type	SCPS3 SCPS3-L	ø6	●	●	●	●
		ø10/ø16	●	●	●	●
Single acting, retract type	SCPH3 SCPH3-L	ø6	●	●	●	●
		ø10/ø16	●	●	●	●
Double acting heat resistant type	SCPD3-T	ø6	●	●	●	●
		ø10	●	●	●	●
		ø16	●	●	●	●
Double acting rubber cushioned	SCPD3-*C SCPD3-L-*C	ø6 ø10 ø16	●	●	●	●
Double acting fine speed type	SCPD3-F SCPD3-LF	ø6 ø10 ø16	●	●	●	●
Double acting low speed type	SCPD3-O SCPD3-OL	ø6	●	●	●	●
		ø10	●	●	●	●
		ø16	●	●	●	●
Double acting double rod type	SCPD3-D SCPD3-DL	ø6	●	●	●	●
		ø10/ø16	●	●	●	●
Single acting non-rotating type	SCPS3-M SCPS3-ML	ø10/ø16	●	●	●	●
Double acting non-rotating type	SCPD3-M SCPD3-ML	ø10	●	●	●	●
		ø16	●	●	●	●

About custom order

The variations below are also available. Contact CKD for details.

Variation	Model no.	Bore size (mm)
Double acting with valve	SCPD3-V SCPD3-VL	ø10 ø16
Single acting with valve	SCPS3-V SCPS3-VL	ø10 ø16
Double acting high load type	SCPD3-K SCPD3-KL	ø6 ø10 ø16
Double acting with speed controller	SCPD3-Z SCPD3-ZL	ø10 ø16
Double acting double rod heat resistant type	SCPD3-DT	ø6 ø10 ø16
Double acting clean room specifications	SCPD3-……P7* SCPD3-……P5*	ø6 ø10 ø16

●: Standard ◎: Semi-standard ○: Custom order ▒: Not available

Min. stroke length (mm)	Max. stroke length (mm)	Available stroke length (mm)	By custom stroke length (mm) increment	Mounting style: Basic type 00	Mounting style: Both sides axial foot LB	Mounting style: One side axial foot rod end LS	Mounting style: Rod end flange type FA	Mounting style: Clevis bracket type CB	Option: Copper and PTFE free P6	Accessory: Rod eye I	Accessory: Rod clevis Y	Accessory: Eye bracket B1	Accessory: Clevis Bracket B2	Switch	Page
5	100	105	1	●	▒	●	●	▒	●	▒	▒	▒	▒	◎	1
	200	210		●	▒	●	●	●	●	◎	◎	◎	◎		
	260	270		●	▒	●	●	●	●	◎	◎	◎	◎		
5	100	105	1	●	▒	●	●	▒	●	▒	▒	▒	▒	◎	9
	120	120		●	▒	●	●	●	●	◎	◎	◎	◎		
5	100	105	1	●	▒	●	●	▒	●	▒	▒	▒	▒	◎	9
	120	120		●	▒	●	●	●	●	◎	◎	◎	◎		
5	100	100	1	●	▒	●	●	▒	▒	▒	▒	▒	▒	▒	19
	200	200		●	▒	●	●	●	▒	◎	◎	◎	◎		
	260	260		●	▒	●	●	●	▒	◎	◎	◎	◎		
5	100	100	1	●	▒	●	●	▒	●	◎	◎	◎	◎	◎	21
	200	200						●							
	260	260						●							
5	100	100	1	●	▒	●	●	▒	▒	◎	◎	◎	◎	◎	27
	200	200						●							
	260	260						●							
5	100	100	1	●	▒	●	●	▒	▒	▒	▒	▒	▒	◎	31
	200	200		●	▒	●	●	●	▒	◎	◎	◎	◎		
	260	260		●	▒	●	●	●	▒	◎	◎	◎	◎		
5	60	60	1	●	●	●	●	▒	●	▒	▒	▒	▒	◎	35
	120	120		●	●	●	●	▒	●	◎	◎	▒	▒		
5	120	120	1	●	▒	●	●	●	●	◎	◎	◎	◎	◎	41
5	200	210	1	●	▒	●	●	●	●	◎	◎	◎	◎	◎	41
	260	270		●	▒	●	●	●	●	◎	◎	◎	◎		

Pencil shaped cylinder Double acting single rod type

SCPD3 Series

● Bore size: ø6/ø10/ø16

JIS symbol

RoHS

Specifications

Descriptions		SCPD3 SCPD3-L		
Bore size	mm	ø6	ø10	ø16
Actuation		Double acting		
Working fluid		Compressed air		
Max. working pressure	MPa	1.0		
Min. working pressure	MPa	0.15	0.1	
Withstanding pressure	MPa	1.6		
Ambient temperature	°C	-10 to 60 (no freezing)		
Port size		M5		
Stroke tolerance	mm	+1.0 0		
Working piston speed	mm/s	50 to 750		
Cushion		Rubber cushion		
Lubrication		Not required (when lubricating, use turbine oil Class 1 ISO VG32.)		
Allowable energy absorption	J	0.012	0.041	0.162

Stroke length

Bore size (mm)		Standard stroke length (mm)	Max. stroke length (mm)	Available stroke length (mm)	Min. stroke length (mm)
SCPD3	ø6	15/30/45/60	100	105	5
	ø10		200	210	
	ø16		260	270	

Note 1: The custom stroke length is available by 1mm increment.

Minimum stroke length with switch

	One		Two	
Schematic	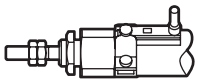	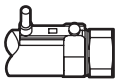	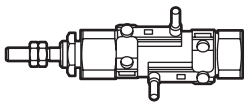	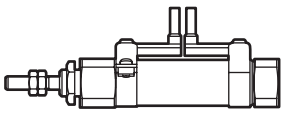
	Rod side installation	Head side installation	Different surface installation	Same surface installation
Min. stroke length	5mm		10mm	28mm

Switch specifications

Descriptions	Proximity 2 wire		Proximity 3 wire	
	T2H / T2V	T2WH / T2WV	T3H / T3V	T3WH / T3WV
Applications	Programmable controller		Programmable controller, relay	
Output method	-		NPN output	
Power voltage	-		10 to 28VDC	
Load voltage	10 to 30VDC	24VDC±10%	30VDC or less	
Load current	5 to 20mA		100mA or less	50mA or less
Light	LED (ON lighting)	Red/green LED (ON lighting)	LED (ON lighting)	Red/green LED (ON lighting)
Leakage current	1mA or less		10 μA or less	
Weight g	1m:18 3m:49 5m:80		1m:18 3m:49 5m:80	

Descriptions	Reed 2 wire			
	T0H / T0V		T5H / T5V	
Applications	Programmable controller, relay		Programmable controller, relay IC circuit (without light), serial connection	
Load voltage	12/24VDC	110VAC	5/12/24VDC	110VAC
Load current	5 to 50mA	7 to 20mA	50mA or less	20mA or less
Light	LED (ON lighting)		Without indicator light	
Leakage current	0mA		0mA	
Weight g	1m:18 3m:49 5m:80		1m:18 3m:49 5m:80	

Cylinder weight

(Unit: g)

Descriptions / Bore size(mm)	Mounting bracket weight			Weight for 0mm stroke	Additional weight per 10mm stroke	Switch weight (per switch)	Bracket weight
	Foot type LS	Flange type FA	Clevis type CB				
ø6	6	4	-	13	1	Refer to weight written on switch specifications.	2
ø10	6	4	4	21	2		
ø16	15	12	10	42	3		

(ex.) Product weight of SCPD3-L-LS-10-30-T0H-D

- Mounting bracket weight (foot type)..... 6g
- Weight for 0mm stroke 21g
- Additional weight for 30mm stroke.....2×30/10=6g
- Switch weight..... 2×(18+2)=40g
- Product weight.....6+21+6+40=73g

How to order

Without switch

SCPD3 - 00 - 10 - 15 - O ——— Y

With switch

SCPD3-L - 00 - 10 - 15 - O - T2H - R - Y

Ⓐ Model no.

Ⓑ Mounting style Note 1

Ⓒ Bore size

Ⓓ Stroke length

Ⓔ Head end port direction Note 1

Ⓕ Switch model no. Note 3 * indicates cable length.

Ⓖ Switch quantity

Ⓗ Accessory Note 4

Symbol	Descriptions
Ⓐ Model no.	
SCPD3	Double acting
SCPD3-L	Double acting with switch

Ⓑ Mounting style

Bore size (ø)		6	10	16
00	Basic type	●	●	●
LS	One side axial foot type (rod end)	●	●	●
FA	Rod end flange type	●	●	●
CB	Clevis bracket type (pin and snap ring included)		●	●

Ⓒ Bore size (mm)

6	ø6
10	ø10
16	ø16

Ⓓ Stroke length (mm)

Bore size	Stroke length Note 2	Available stroke length	Custom stroke length
ø6	**5 to 100**	**105**	By 1 mm increment
ø10	**5 to 200**	**210**	
ø16	**5 to 260**	**270**	

Ⓔ Head end port direction

Blank	Vertical
O	Axial direction

Ⓕ Switch model no.

Lead wire Axial	L-type lead wire	Connection	Voltage AC	Voltage DC	Indicator type	Lead wire
T0H*	**T0V***	Reed	●	●	One color indicator type	2 wire
T5H*	**T5V***		●	●	Without indicator light	
T2H*	**T2V***	Proximity		●	One color indicator type	2 wire
T3H*	**T3V***			●		3 wire
T2WH*	**T2WV***			●	Two color indicator type	2 wire
T3WH*	**T3WV***			●		3 wire

***Lead wire length**

Blank	1m (standard)
3	3m (option)
5	5m (option)

Ⓕ Switch quantity

R	One on rod end
H	One on head end
D	Two
T	Three

Ⓗ Accessory

Mounting style (ø)		6	10	16
I	Rod eye		●	●
Y	Rod clevis (pin and snap ring attached)		●	●
B1	Eye bracket		●	●
B2	Clevis bracket		●	●

⚠ Note on model no. selection

Note 1: Support type CB cannot be made for port orientation "0" axial.
Note 2: Refer to page 1 for min. stroke length with switch.
Note 3: Magnet is not integrated for types without switch.
Note 4: "I" and "Y" cannot be chosen at the same time.
Note 5: Copper and PTFE free as standard.
Note 6: Switches will be attached with cylinders when shipping.

<Example of model number>
SCPD3-L-00-10-30-O-T2H-R-I
Model: Pencil shaped cylinder

Ⓐ Model no.	: Double acting
Ⓑ Mounting style	: Basic type
Ⓒ Bore size	: ø10mm
Ⓓ Stroke length	: 30mm
Ⓔ Head end port direction	: Axial direction
Ⓕ Switch model no.	: Proximity switch T2H, lead wire 1m
Ⓖ Switch quantity	: One on rod end
Ⓗ Accessory	: Rod eye

How to order switch

● Switch + mounting bracket set

SCPD3 - T0H - 6

Bore size
(previous page, point “C”)

Switch model no.
(previous page, point “F”)

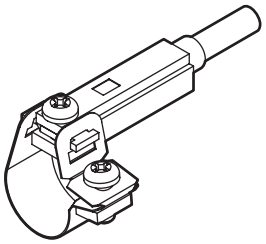

● Switch (with fixing bracket)

SCPD3 - T0H

Switch model no.
(previous page,
point “F”)

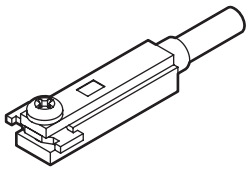

Note) The small cross pan head screw for the fixed bracket differs from the T-type standard switch.

● Mounting bracket set + fixing bracket

SCPD3 - TS - 6

Bore size
(previous page,
point “C”)

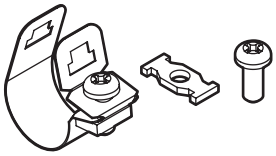

Orders of 20 or more are packaged as a set.

● Mounting bracket set

SCPD3 - T - 6

Bore size
(previous page,
point “C”)

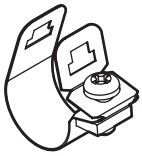

Orders of 20 or more are packaged as a set.

How to order mounting bracket

Bore size (mm) / Mounting bracket	ø6	ø10	ø16
Foot (LS)	P2-LS-6	P2-LS-10	P2-LS-16
Flange (FA)	P2-FA-6	P2-FA-10	P2-FA-16

Note: 1 pc. / set is applied for a foot (LS) type mounting bracket.

Internal structure and parts list

● Double acting
SCPD3-(L)

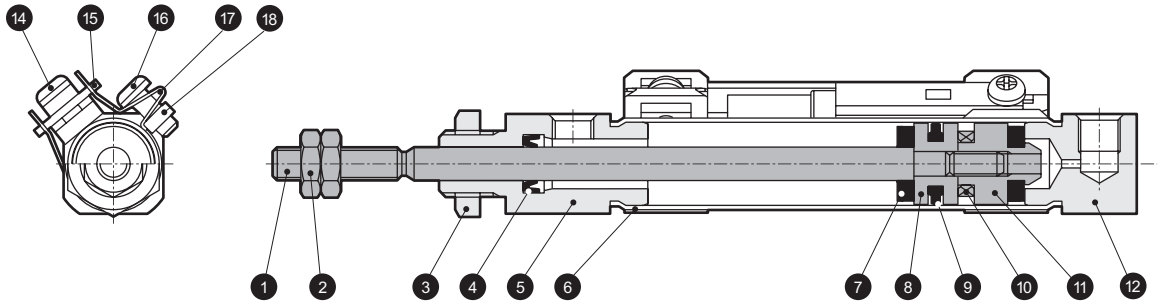

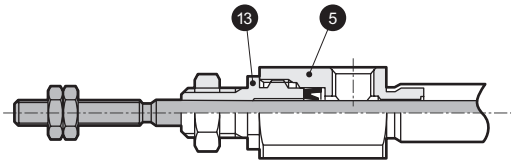

For ø6

● This product cannot be disassembled.

No.	Part name	Material	Remarks	No.	Part name	Material	Remarks
1	Piston rod	Stainless steel		10	Magnet	-	Only with switch
2	Rod nut	Steel	Nickeling	11	Spacer	Aluminum alloy	
3	Hexagon nut	Steel	Nickeling	12	Head cover	Aluminum alloy	Hard alumite
4	Rod packing seal	Nitrile rubber		13	Rod bushing	Aluminum alloy	Hard alumite
5	Rod cover	Aluminum alloy	Hard alumite	14	Small cross pan head thread	Stainless steel	Only with switch
6	Cylinder tube	Stainless steel		15	Bracket	Stainless steel	Only with switch
7	Cushion rubber	Urethane rubber		16	Small cross pan head thread	Stainless steel	Only with switch
8	Piston	Aluminum alloy		17	Band	Stainless steel	Only with switch
9	Piston packing seal	Nitrile rubber		18	Fixing nut	Stainless steel	Only with switch

Dimensions

● SCPD3-(L) Basic type (00)

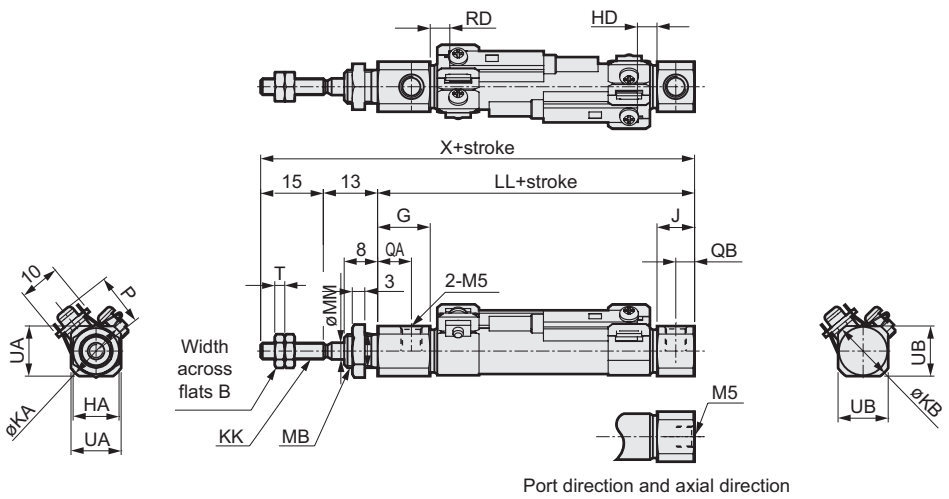

Note 1: The dimensions without switch are same as the ones with switch. (The magnet is not integrated.)
Note 2: The ø6 and ø10 port thread depth is 3.8 mm. When using a fitting, prepare a fitting with a thread length of 3.8 mm or less.
Note 3: Refer to page 51 for accessory dimensions.
Note 4: Value in ( ) parentheses represents the port direction axial type.

Symbol / Bore size (mm)	Basic type (00) basic dimensions																With switch				
	B	G	HA	J	KA	KB	KK	LL	MB	MM	QA	QB	T	UA	UB	X	T0,T5,T2,T3		T2W,T3W		P
																	RD	HD	RD	HD	
ø6	5.5	17	8	8	13.5	13.5 (10)	M3	47	M6	3	13	4	1.8	11	11 (9)	75	2	2	4	3.5	5.5
ø10	7	12.5	11	9	14.5	14.5	M4	46	M8×1.0	4	8	4.5	2.4	12	12	74	3.5	2.5	5.5	4	12.5
ø16	8	13	14	9	21.5	21.5	M5	46	M10×1.0	5	8.5	4.5	3.2	18	18	74	3.5	2	5	3.5	15.5

● One side axial foot (LS)

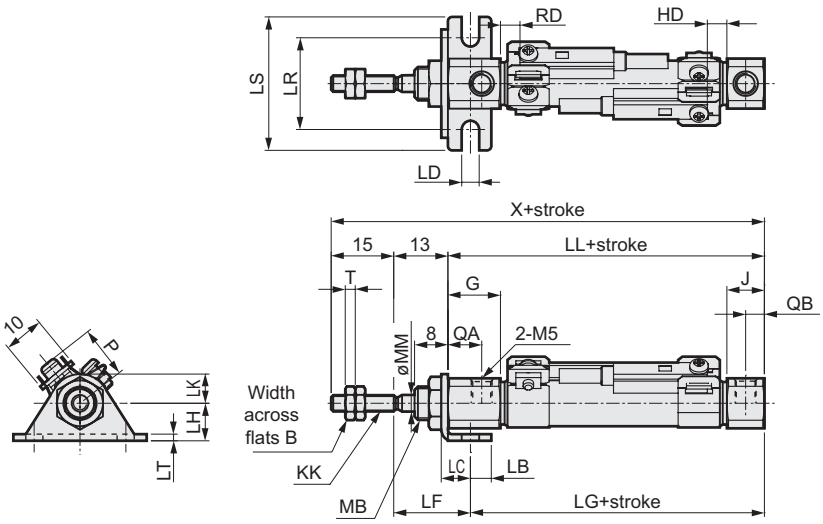

Note 1: The dimensions without switch are same as the ones with switch. (The magnet is not integrated.)
Note 2: The ø6 and ø10 port thread depth is 3.8 mm. When using a fitting, prepare a fitting with a thread length of 3.8 mm or less.
Note 3: Refer to page 51 for accessory dimensions.

Symbol / Bore size (mm)	Basic type (00) basic dimensions										Mounting dimensions										With switch				
	B	G	J	KK	MB	MM	QA	QB	T	X	LB	LC	LD	LF	LL	LH	LK	LR	LS	LT	T0,T5,T2,T3		T2W,T3W		P
																					RD	HD	RD	HD	
ø6	5.5	17	8	M3	M6	3	13	4	1.8	75	5	7	4.2	18.4	47	9	7	22	32	1.6	2	2	4	3.5	5.5
ø10	7	12.5	9	M4	M8×1.0	4	8	4.5	2.4	74	5	7	4.2	18.4	46	9	7	22	32	1.6	3.5	2.5	5.5	4	12.5
ø16	8	13	9	M5	M10×1.0	5	8.5	4.5	3.2	74	6	9	5.2	19.7	46	14	10	29	42	2.3	3.5	2	5	3.5	15.5

Dimensions

● Rod end flange type (FA)

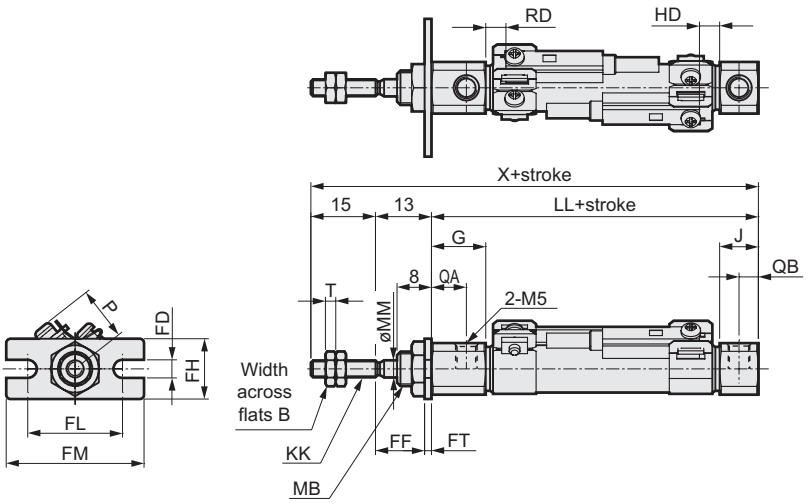

Note 1: The dimensions without switch are same as the ones with switch. (The magnet is not integrated.)
Note 2: The ø6 and ø10 port thread depth is 3.8 mm. When using a fitting, prepare a fitting with a thread length of 3.8 mm or less.
Note 3: Refer to page 51 for accessory dimensions.

Symbol / Bore size (mm)	Rod end flange (FA) standard dimensions											Mounting dimensions						With switch				
	B	G	J	KK	LL	MB	MM	QA	QB	T	X	FD	FF	FH	FL	FM	FT	T0,T5,T2,T3		T2W,T3W		P
																		RD	HD	RD	HD	
ø6	5.5	17	8	M3	47	M6	3	13	4	1.8	75	4.2	11.4	14	22	32	1.6	2	2	4	3.5	5.5
ø10	7	12.5	9	M4	46	M8×1.0	4	8	4.5	2.4	74	4.2	11.4	14	22	32	1.6	3.5	2.5	5.5	4	12.5
ø16	8	13	9	M5	46	M10×1.0	5	8.5	4.5	3.2	74	5.2	10.7	20	29	42	2.3	3.5	2	5	3.5	15.5

● Clevis bracket type (CB)

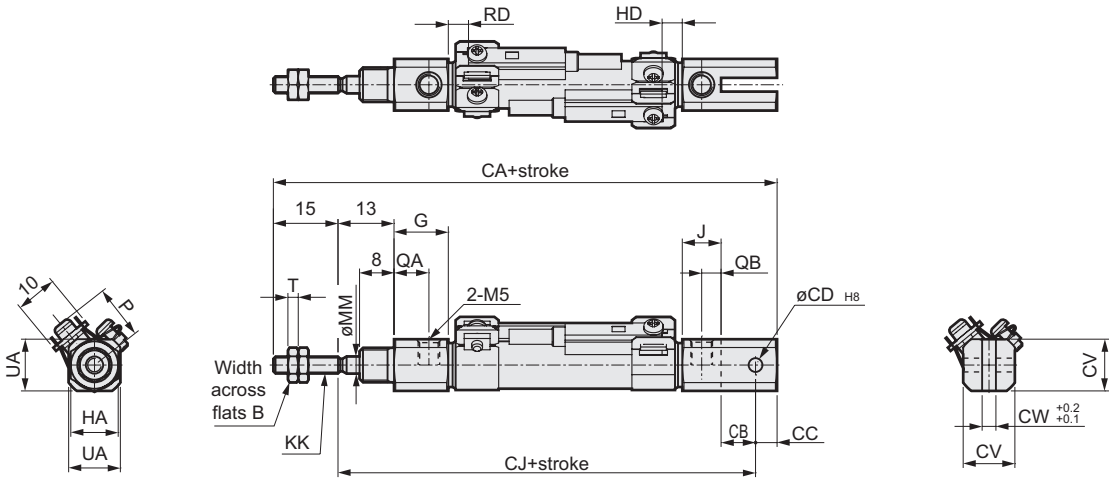

Note 1: The dimensions without switch are same as the ones with switch. (The magnet is not integrated.)
Note 2: The ø6 and ø10 port thread depth is 3.8 mm. When using a fitting, prepare a fitting with a thread length of 3.8 mm or less.
Note 3: Pin and fastener are attached.
Note 4: Refer to page 51 for accessory dimensions.

Symbol / Bore size (mm)	Basic type (00) basic dimensions									Mounting dimensions							With switch				
	B	G	J	KK	MM	QA	QB	T	UA	CA	CB	CC	CD	CJ	CV	CW	T0,T5,T2,T3		T2W,T3W		P
																	RD	HD	RD	HD	
ø10	7	12.5	9	M4	4	8	4.5	2.4	12	87	8	5	3.2	67	12	3.2	3.5	2.5	5.5	4	12.5
ø16	8	13	9	M5	5	8.5	4.5	3.2	18	94	10	10	5	69	18	6.5	3.5	2	5	3.5	15.5

MEMO

Pencil shaped cylinder Single acting, extend type / Single acting, retract type

SCPS3/SCPH3 Series

● Bore size: ø6/ø10/ø16

JIS symbol

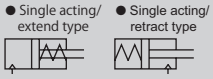

RoHS

Specifications

Descriptions		SCPS3 SCPS3-L			SCPH3 SCPH3-L		
Bore size	mm	ø6	ø10	ø16	ø6	ø10	ø16
Actuation		Single acting, extend type			Single acting, retract type		
Working fluid		Compressed air					
Max. working pressure	MPa	1.0					
Min. working pressure	MPa	0.3	0.15		0.39	0.2	
Withstanding pressure	MPa	1.6					
Ambient temperature	°C	-10 to 60 (no freezing)					
Port size		M5					
Stroke tolerance	mm	+1.0 0					
Working piston speed	mm/s	50 to 750					
Cushion		Rubber air cushion					
Lubrication		Not required (when lubricating, use turbine oil Class 1 ISO VG32.)					
Allowable energy absorption	J	0.012	0.041	0.162	0.012	0.041	0.162

Note 1: Do not leave the single acting cylinder in a pressurized state. If left in the pressurized state, the piston rod may not return with spring force when pressure is released.

Stroke length

Bore size (mm)		Standard stroke length (mm)	Max. stroke length (mm)	Min. stroke length (mm)
SCPS3 SCPH3	ø6	15/30/45/60	100	5
	ø10		120	
	ø16			

Note 1: The custom stroke length is available by 1mm increment.

Minimum stroke length with switch

	One		Two	
Schematic	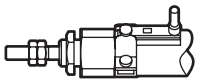	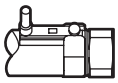	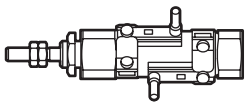	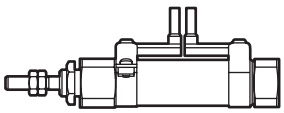
	Rod side installation	Head side installation	Different surface installation	Same surface installation
Min. stroke length	5mm		10mm	28mm

Switch specifications

Descriptions	Proximity 2 wire		Proximity 3 wire	
	T2H/T2V	T2WH/T2WV	T3H/T3V	T3WH/T3WV
Applications	Programmable controller		Programmable controller, relay	
Output method	-		NPN output	
Power voltage	-		10 to 28VDC	
Load voltage	10 to 30VDC	24VDC±10%	30VDC or less	
Load current	5 to 20mA		100mA or less	50mA or less
Light	LED (ON lighting)	Red/green LED (ON lighting)	LED (ON lighting)	Red/green LED (ON lighting)
Leakage current	1mA or less		10 μA or less	
Weight g	1m:18 3m:49 5m:80		1m:18 3m:49 5m:80	

Descriptions	Reed 2 wire			
	T0H/T0V		T5H/T5V	
Applications	Programmable controller, relay		Programmable controller, relay IC circuit (without light), serial connection	
Load voltage	12/24VDC	110VAC	5/12/24VDC	110VAC
Load current	5 to 50mA	7 to 20mA	50mA or less	20mA or less
Light	LED (ON lighting)		Without indicator light	
Leakage current	0mA		0mA	
Weight g	1m:18 3m:49 5m:80		1m:18 3m:49 5m:80	

Single acting spring load (SCPS3/SCPH3)

(Unit: N)

Bore size (mm)	When 0mm stroke	Full stroke length during operation
ø6	1.7	3.7
ø10	3.2	7.5
ø16	6.4	14.9

Cylinder weight

(Unit: g)

Descriptions / Bore size (mm)	Mounting bracket weight			Weight for 0mm stroke	Additional weight per 10mm stroke	Switch weight (per switch)	Bracket weight
	Foot type LS	Flange type FA	Clevis type CB				
ø6	6	4	-	9	2	Refer to weight written on switch specifications.	2
ø10	6	4	4	20	4		
ø16	15	12	10	35	8		

(ex.) Product weight of SCPD3-L-LS-10-30-T0H-D

- Mounting bracket weight (foot type)..... 6g
- Weight for 0mm stroke 20g
- Additional weight for 30mm stroke.....4×30/10=12g
- Switch weight..... 2×(18+2)=40g
- Product weight.....6+20+12+40=78g

How to order

Without switch

SCPS3 - 00 - 10 - 15 - O ——— Y

With switch

SCPS3-L - 00 - 10 - 15 - O - T2H - R - Y

Ⓐ Model no.

Ⓑ Mounting style Note 1

Ⓒ Bore size

Ⓓ Stroke length

Ⓔ Head end port direction Note 1

Ⓕ Switch model no. Note 3 * indicates cable length.

Ⓖ Switch quantity

Ⓗ Accessory Note 4

Symbol	Descriptions
Ⓐ Model no.	
SCPS3	Single acting, extend type
SCPS3-L	Single acting, extend type, with switch
SCPH3	Single acting, retract type
SCPH3-L	Single acting, retract type, with switch

Ⓑ Mounting style

	Bore size (ø)	6	10	16
00	Basic type	●	●	●
LS	One side axial foot type (rod end)	●	●	●
FA	Rod end flange type	●	●	●
CB	Clevis bracket type (pin and snap ring attached)		●	●

Ⓒ Bore size(mm)

6	ø6
10	ø10
16	ø16

Ⓓ Stroke length (mm)

Bore size	Stroke length Note 2	Available stroke length	Custom stroke length
ø6	**5 to 100**	**105**	By 1 mm increment
ø10	**5 to 120**	**120**	
ø16	**5 to 120**	**120**	

Ⓔ Head end port direction

Blank	Vertical
O	Axial direction “SCPH3(-L) can not be selected.”

Ⓕ Switch model no.

Axial lead wire	L-type lead wire	Connection	Voltage AC	Voltage DC	Indicator	Lead wire
T0H*	**T0V***	Reed	●	●	One color indicator type	2 wire
T5H*	**T5V***		●	●	Without indicator light	
T2H*	**T2V***	Proximity		●	One color indicator type	2 wire
T3H*	**T3V***			●		3 wire
T2WH*	**T2WV***			●	Two color indicator type	2 wire
T3WH*	**T3WV***			●		3 wire

***Lead wire length**

Blank	1m (standard)
3	3m (option)
5	5m (option)

Ⓖ Switch quantity

R	One on rod end
H	One on head end
D	Two
T	Three

Ⓗ Accessory

	Mounting style (ø)	6	10	16
I	Rod eye		●	●
Y	Rod clevis (pin and snap ring attached)		●	●
B1	Eye bracket		●	●
B2	Clevis bracket		●	●

⚠ Note on model no. selection

Note 1: Support type CB cannot be made for port orientation “0,” axial.
Note 2: Refer to page 9 for min. stroke length with switch.
Note 3: Magnet is not integrated for types without switch.
Note 4: “I” and “Y” cannot be chosen at the same time.
Note 5: Copper and PTFE free as standard.
Note 6: Switches will be attached with cylinders when shipping.

<Example of model number>
SCPS3-L-00-10-30-O-T2H-R-I
Model: Pencil shaped cylinder

Ⓐ Model no.	: Single acting, extend type
Ⓑ Mounting style	: Basic type
Ⓒ Bore size	: ø10mm
Ⓓ Stroke length	: 30mm
Ⓔ Head end port direction	: Axial direction
Ⓕ Switch model no.	: Proximity switch T2H, lead wire 1m
Ⓖ Switch quantity	: One on rod end
Ⓗ Accessory	: Rod eye

How to order switch

● Switch + mounting bracket set

SCPD3 - T0H - 6

Bore size
(previous page, point “C”)

Switch model no.
(previous page, point “F”)

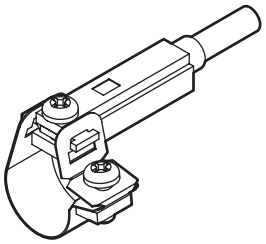

● Switch (with fixing bracket)

SCPD3 - T0H

Switch model no.
(previous page,
point “F”)

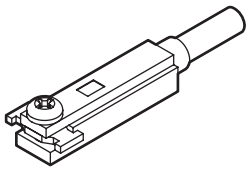

Note) The small cross pan head screw for the fixed bracket differs from the T-type standard switch.

● Mounting bracket set + fixing bracket

SCPD3 - TS - 6

Bore size
(previous page,
point “C”)

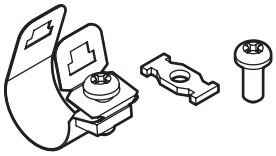

Orders of 20 or more are packaged as a set.

● Mounting bracket set

SCPD3 - T - 6

Bore size
(previous page,
point “C”)

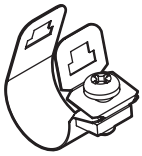

Orders of 20 or more are packaged as a set.

How to order mounting bracket

Bore size (mm) / Mounting bracket	ø6	ø10	ø16
Foot (LS)	P2-LS-6	P2-LS-10	P2-LS-16
Flange (FA)	P2-FA-6	P2-FA-10	P2-FA-16

Note: 1 pc. / set is applied for a foot (LS) type mounting bracket.

Internal structure and parts list

● Single acting extend type
SCPS3
SCPS3-L (with switch)

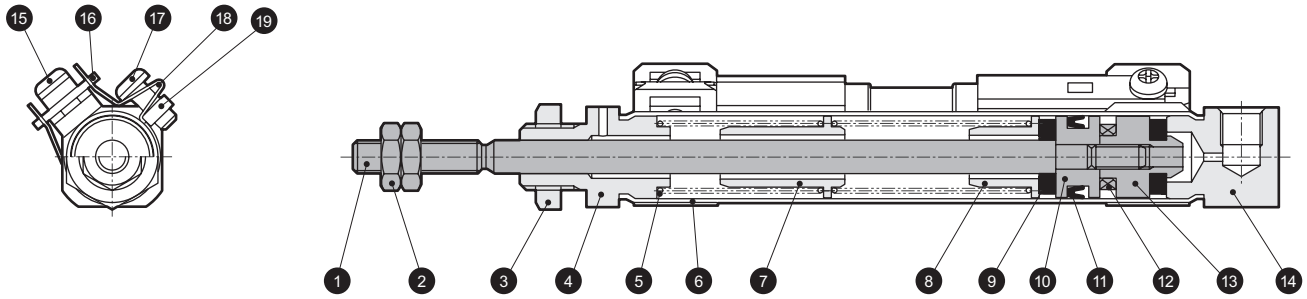

● This product cannot be disassembled.

No.	Part name	Material	Remarks	No.	Part name	Material	Remarks
1	Piston rod	Stainless steel		11	Piston packing seal	Nitrile rubber	
2	Rod nut	Steel	Nickeling	12	Magnet	-	Only with switch
3	Hexagon nut	Steel	Nickeling	13	Spacer	Aluminum alloy	
4	Rod cover	Aluminum alloy	Hard alumite	14	Head cover	Aluminum alloy	Hard alumite
5	Coil spring	Piano wire	Galvanized chromate	15	Small cross pan head thread	Stainless steel	Only with switch
6	Cylinder tube	Stainless steel		16	Bracket	Stainless steel	Only with switch
7	Spring holder (A)	Aluminum alloy		17	Small cross pan head thread	Stainless steel	Only with switch
8	Spring holder (B)	Aluminum alloy		18	Band	Stainless steel	Only with switch
9	Cushion rubber	Urethane rubber		19	Fixing nut	Stainless steel	Only with switch
10	Piston	Aluminum alloy					

Internal structure and parts list

- Single acting retract type
  SCPH3
  SCPH3-L (with switch)

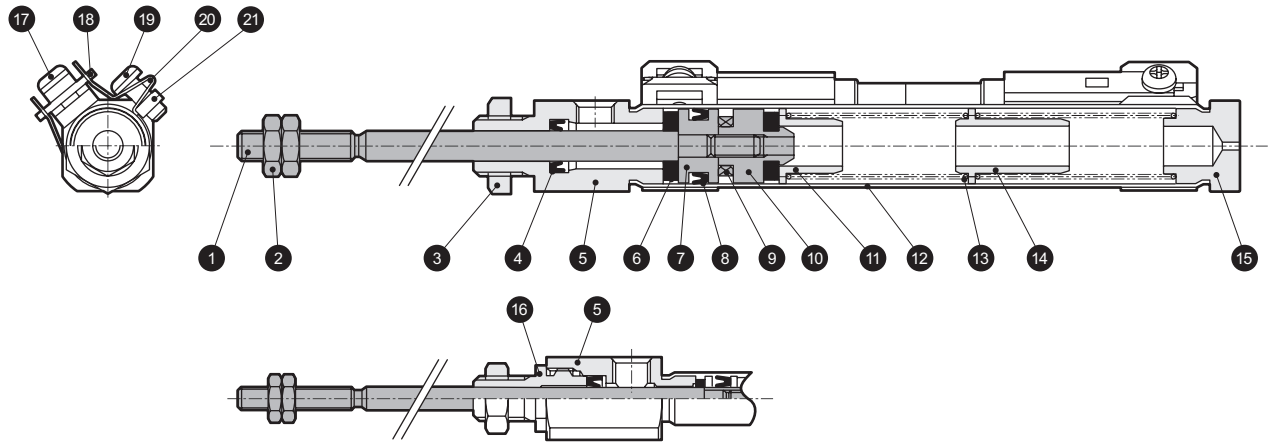

For ø6

- This product cannot be disassembled.

No.	Part name	Material	Remarks	No.	Part name	Material	Remarks
1	Piston rod	Stainless steel		12	Cylinder tube	Stainless steel	
2	Rod nut	Steel	Nickeling	13	Coil spring	Piano wire	Galvanized chromate
3	Hexagon nut	Steel	Nickeling	14	Spring holder (B)	Aluminum alloy	
4	Rod packing seal	Nitrile rubber		15	Head cover	Aluminum alloy	Hard alumite
5	Rod cover	Aluminum alloy	Hard alumite	16	Rod bushing	Aluminum alloy	Hard alumite
6	Cushion rubber	Urethane rubber		17	Small cross pan head thread	Stainless steel	Only with switch
7	Piston	Aluminum alloy		18	Bracket	Stainless steel	Only with switch
8	Piston packing seal	Nitrile rubber		19	Small cross pan head thread	Stainless steel	Only with switch
9	Magnet	-	Only with switch	20	Band	Stainless steel	Only with switch
10	Spacer	Aluminum alloy		21	Fixing nut	Stainless steel	Only with switch
11	Spring holder (A)	Aluminum alloy					

Dimensions

● SCPS3-(L) Basic type (00)

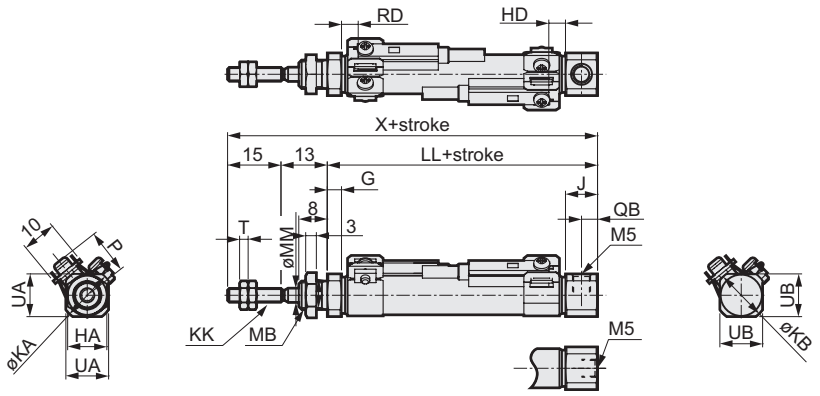

Port direction and axial direction

Note 1: The dimensions without switch are same as the ones with switch. (The magnet is not integrated.)
Note 2: The ø6 and ø10 port thread depth is 3.8 mm. When using a fitting, prepare a fitting with a thread length of 3.8 mm or less.
Note 3: Dimensions listed in ( ) parentheses are for "0" Axial type head-side port direction.
Note 4: Refer to page 51 for accessory dimensions.

Symbol / Bore size (mm)	Basic type (00) basic dimensions																							
	B	G	HA	J	KA	KB	KK	LL								MB	MM	QB	T	UA	UB	X		
								15 or less	Over 15 to 30	Over 30 to 45	Over 45 to 60	Over 60 to 75	Over 75 to 90	Over 90 to 105	Over 105 to 120							15 or less	Over 15 to 30	Over 30 to 45
ø6	5.5	3	8	8	9	13.5(10)	M3	43.5	48.5	63.5	68.5	83.5	88.5	103.5	-	M6	3	4	1.8	8	11(8)	71.5	76.5	91.5
ø10	7	4	11	9	14.5	14.5	M4	47	52	62	67	77	82	92	97	M8×1.0	4	4.5	2.4	12	12	75	80	90
ø16	8	4	14	9	21.5	21.5	M5	47	52	62	67	77	82	92	97	M10×1.0	5	4.5	3.2	18	18	75	80	90

Symbol / Bore size (mm)	With switch																									
	X					T0,T5,T2,T3										T2W,T3W										
						RD								HD		RD								HD	P	
	Over 45 to 60	Over 60 to 75	Over 75 to 90	Over 90 to 105	Over 105 to 120	15 or less	Over 15 to 30	Over 30 to 45	Over 45 to 60	Over 60 to 75	Over 75 to 90	Over 90 to 105	Over 105 to 120			15 or less	Over 15 to 30	Over 30 to 45	Over 45 to 60	Over 60 to 75	Over 75 to 90	Over 90 to 105	Over 105 to 120			
ø6	96.5	111.5	116.5	131.5	-	12	17	32	37	52	57	72	-	2		14	19	34	39	54	59	74	-	3.5	5.5	
ø10	95	105	110	120	125	13.5	18.5	28.5	33.5	43.5	48.5	58.5	63.5	2.5		15	20	30	35	45	50	60	65	4	12.5	
ø16	95	105	110	120	125	11.5	16.5	26.5	31.5	41.5	46.5	56.5	61.5	3.5		13.5	18.5	28.5	33.5	43.5	48.5	58.5	63	3.5	15.5	

● One side axial foot (LS)

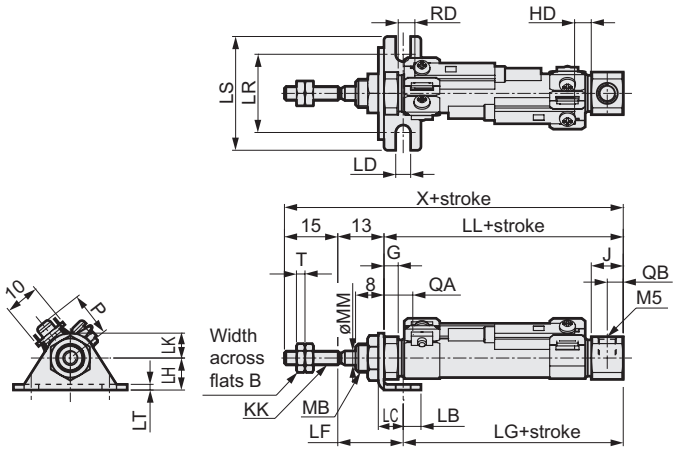

Note 1: The dimensions without switch are same as the ones with switch. (The magnet is not integrated.)
Note 2: The ø6 and ø10 port thread depth is 3.8 mm. When using a fitting, prepare a fitting with a thread length of 3.8 mm or less.
Note 3: Refer to page 51 for accessory dimensions.

Symbol / Bore size (mm)	One side axial foot (LS) basic dimensions															Mounting dimensions										
	B	G	KK	MB	MM	QB	T	X								LB	LC	LD	LF	LG						
								15 or less	Over 15 to 30	Over 30 to 45	Over 45 to 60	Over 60 to 75	Over 75 to 90	Over 90 to 105	Over 105 to 120					15 or less	Over 15 to 30	Over 30 to 45	Over 45 to 60	Over 60 to 75	Over 75 to 90
ø6	5.5	3	M3	M6	3	4	1.8	71.5	76.5	91.5	96.5	111.5	116.5	131.5	-	5	7	4.2	18.4	38.1	43.1	58.1	63.1	78.1	83.1
ø10	7	4	M4	M8×1.0	4	4.5	2.4	75	80	90	95	105	110	120	125	5	7	4.2	18.4	41.9	46.9	56.9	61.9	71.9	76.9
ø16	8	4	M5	M10×1.0	5	4.5	3.2	75	80	90	95	105	110	120	125	6	9	5.2	19.7	40.1	45.1	55.1	60.1	70.1	75.1

Symbol / Bore size (mm)	With switch																										
	LG		LH	LK	LR	LS	LT	T0,T5,T2,T3									T2W,T3W										
								RD								HD	RD								HD	P	
	Over 90 to 105	Over 105 to 120						15 or less	Over 15 to 30	Over 30 to 45	Over 45 to 60	Over 60 to 75	Over 75 to 90	Over 90 to 105	Over 105 to 120		15 or less	Over 15 to 30	Over 30 to 45	Over 45 to 60	Over 60 to 75	Over 75 to 90	Over 90 to 105	Over 105 to 120			
ø6	98.1	-	9	7	22	32	1.6	12	17	32	37	52	57	72	-	2	14	19	34	39	54	59	74	-	3.5	5.5	
ø10	86.9	91.9	9	7	22	32	1.6	13.5	18.5	28.5	33.5	43.5	48.5	58.5	63.5	2.5	15	20	30	35	45	50	60	65	4	12.5	
ø16	85.1	75.1	14	10	29	42	2.3	11.5	16.5	26.5	31.5	41.5	46.5	56.5	61.5	3.5	13.5	18.5	28.5	33.5	43.5	48.5	58.5	63	3.5	15.5	

Dimensions

● Rod end flange type (FA)

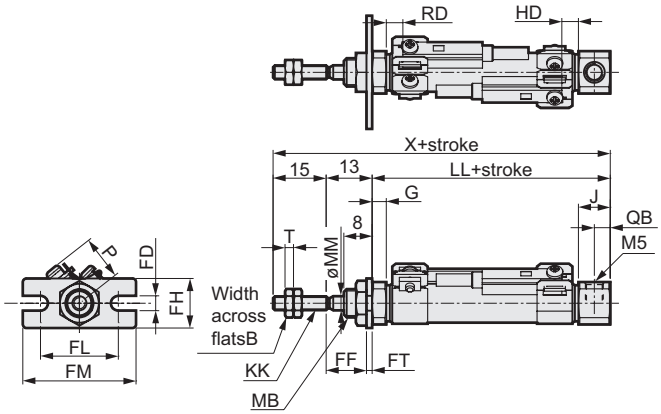

Note 1: The dimensions without switch are same as the ones with switch. (The magnet is not integrated.)
Note 2: The ø6 and ø10 port thread depth is 3.8 mm. When using a fitting, prepare a fitting with a thread length of 3.8 mm or less.
Note 3: Refer to page 51 for accessory dimensions.

Symbol / Bore size (mm)	Rod end flange (FA) standard dimensions																							
	B	G	J	KK	LL								MB	MM	QB	T	X							
					15 or less	Over 15 to 30	Over 30 to 45	Over 45 to 60	Over 60 to 75	Over 75 to 90	Over 90 to 105	Over 105 to 120					15 or less	Over 15 to 30	Over 30 to 45	Over 45 to 60	Over 60 to 75	Over 75 to 90	Over 90 to 105	Over 105 to 120
ø6	5.5	3	8	M3	43.5	48.5	63.5	68.5	83.5	88.5	103.5	-	M6	3	4	1.8	71.5	76.5	91.5	96.5	111.5	116.5	131.5	-
ø10	7	4	9	M4	47	52	62	67	77	82	92	97	M8×1.0	4	4.5	2.4	75	80	90	95	105	110	120	125
ø16	8	4	9	M5	47	52	62	67	77	82	92	97	M10×1.0	5	4.5	3.2	75	80	90	95	105	110	120	125

Symbol / Bore size (mm)	Mounting dimensions						With switch																		
	FD	FF	FH	FL	FM	FT	T0,T5,T2,T3									T2W,T3W									P
							RD								HD	RD								HD	
							15 or less	Over 15 to 30	Over 30 to 45	Over 45 to 60	Over 60 to 75	Over 75 to 90	Over 90 to 105	Over 105 to 120		15 or less	Over 15 to 30	Over 30 to 45	Over 45 to 60	Over 60 to 75	Over 75 to 90	Over 90 to 105	Over 105 to 120		
ø6	4.2	11.4	14	22	32	1.6	12	17	32	37	52	57	72	-	2	14	19	34	39	54	59	74	-	3.5	5.5
ø10	4.2	11.4	14	22	32	1.6	13.5	18.5	28.5	33.5	43.5	48.5	58.5	63.5	2.5	15	20	30	35	45	50	60	65	4	12.5
ø16	5.2	10.7	20	29	42	2.3	11.5	16.5	26.5	31.5	41.5	46.5	56.5	61.5	3.5	13.5	18.5	28.5	33.5	43.5	48.5	58.5	63	3.5	15.5

● Clevis bracket type (CB)

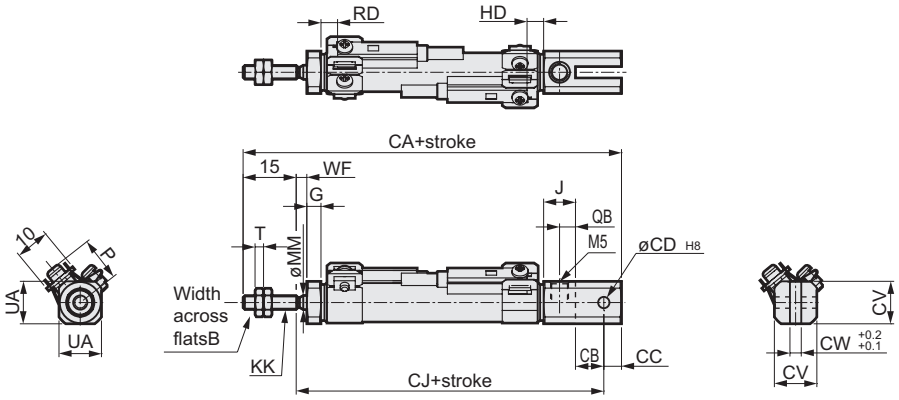

Note 1: The dimensions without switch are same as the ones with switch. (The magnet is not integrated.)
Note 2: Pin and fastener are attached.
Note 3: Refer to page 51 for accessory dimensions.

Symbol / Bore size (mm)	Clevis bracket type (CB) basic dimensions								Mounting dimensions																		
	B	G	J	KK	MM	QB	T	UA	CA								CB	CC	CD	CJ								CV
									15 or less	Over 15 to 30	Over 30 to 45	Over 45 to 60	Over 60 to 75	Over 75 to 90	Over 90 to 105	Over 105 to 120				15 or less	Over 15 to 30	Over 30 to 45	Over 45 to 60	Over 60 to 75	Over 75 to 90	Over 90 to 105	Over 105 to 120	
ø10	7	4	9	M4	4	4.5	2.4	12	80	92	104	116	128	140	152	164	8	5	3.2	60	72	84	96	108	120	132	144	12
ø16	8	4	9	M5	5	4.5	3.2	18	87	99	111	123	135	147	159	171	10	10	5	62	74	86	98	110	122	134	146	18

Symbol / Bore size (mm)										With switch																		
	CW	WF								T0,T5,T2,T3									T2W,T3W									P
										RD								HD	RD								HD	
		15 or less	Over 15 to 30	Over 30 to 45	Over 45 to 60	Over 60 to 75	Over 75 to 90	Over 90 to 105	Over 105 to 120	15 or less	Over 15 to 30	Over 30 to 45	Over 45 to 60	Over 60 to 75	Over 75 to 90	Over 90 to 105	Over 105 to 120		15 or less	Over 15 to 30	Over 30 to 45	Over 45 to 60	Over 60 to 75	Over 75 to 90	Over 90 to 105	Over 105 to 120		
ø10	3.2	5	12	14	21	23	30	32	39	13.5	18.5	28.5	33.5	43.5	48.5	58.5	63.5	2.5	15	20	30	35	45	50	60	65	4	12.5
ø16	6.5	5	12	14	21	23	30	32	39	11.5	16.5	26.5	31.5	41.5	46.5	56.5	61.5	3.5	13.5	18.5	28.5	33.5	43.5	48.5	58.5	63	3.5	15.5

Dimensions

● SCPH3-(L) Basic type (00)

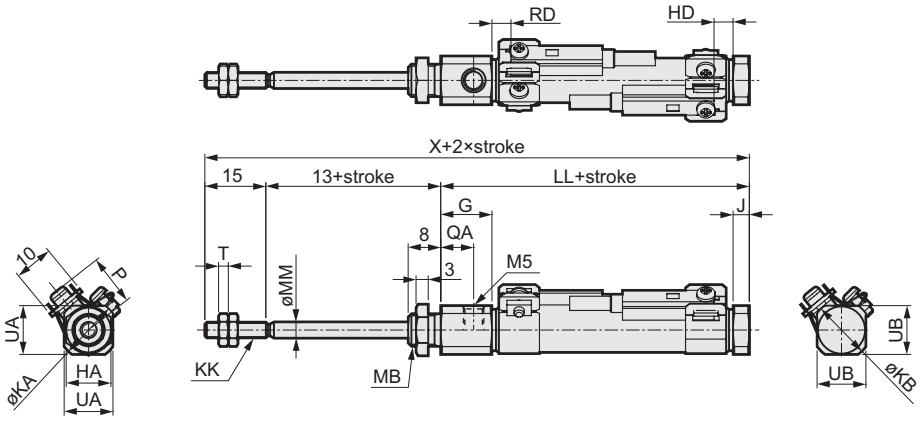

Note 1: The dimensions without switch are same as the ones with switch. (The magnet is not integrated.)
Note 2: The ø6 and ø 10 port thread depth is 3.8 mm. When using a fitting, prepare a fitting with a thread length of 3.8 mm or less.
Note 3: Refer to page 51 for accessory dimensions.

Symbol / Bore size (mm)	Basic type (00) basic dimensions																							
	B	G	HA	J	KA	KB	KK	LL								MB	MM	QA	T	UA	UB	X		
								15 or less	Over 15 to 30	Over 30 to 45	Over 45 to 60	Over 60 to 75	Over 75 to 90	Over 90 to 105	Over 105 to 120							15 or less	Over 15 to 30	Over 30 to 45
ø6	5.5	17	8	3	13.5	10	M3	52.5	57.5	72.5	77.5	92.5	97.5	112.5	-	M6	3	13	1.8	11	8	80.5	85.5	100.5
ø10	7	12.5	11	4	14.5	14.5	M4	51	56	66	71	81	86	96	101	M8×1.0	4	8	2.4	12	12	79	84	94
ø16	8	13	14	4	21.5	21.5	M5	51	56	66	71	81	86	96	101	M10×1.0	5	8.5	3.2	18	18	79	84	94

Symbol / Bore size (mm)						With switch																				
	X					T0,T5,T2,T3										T2W,T3W										P
						RD	HD									RD	HD									
	Over 45 to 60	Over 60 to 75	Over 75 to 90	Over 90 to 105	Over 105 to 120		15 or less	Over 15 to 30	Over 30 to 45	Over 45 to 60	Over 60 to 75	Over 75 to 90	Over 90 to 105	Over 105 to 120		15 or less	Over 15 to 30	Over 30 to 45	Over 45 to 60	Over 60 to 75	Over 75 to 90	Over 90 to 105	Over 105 to 120			
ø6	105.5	120.5	125.5	140.5	-	2	12	17	32	37	52	57	72	-	4	13.5	18.5	33.5	38.5	53.5	58.5	73.5	-	5.5		
ø10	99	109	114	124	129	3.5	10.5	15.5	25.5	30.5	40.5	45.5	55.5	60.5	5.5	12.5	17.5	27.5	32.5	42.5	47.5	57.5	62.5	12.5		
ø16	99	109	114	124	129	3.5	12.5	17.5	27.5	32.5	42.5	47.5	57.5	62.5	5	14	19	29	34	44	49	59	64	15.5		

● One side axial foot (LS)

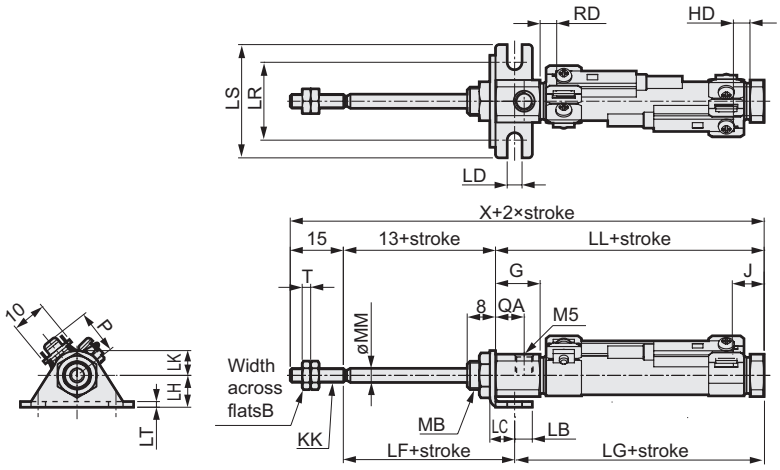

Note 1: The dimensions without switch are same as the ones with switch. (The magnet is not integrated.)
Note 2: The ø6 and ø10 port thread depth is 3.8 mm. When using a fitting, prepare a fitting with a thread length of 3.8 mm or less.
Note 3: Refer to page 51 for accessory dimensions.

Symbol / Bore size (mm)	One side axial foot (LS) basic dimensions																Mounting dimensions									
	B	G	J	KK	MB	MM	QA	T	X								LB	LC	LD	LF	LG					
									15 or less	Over 15 to 30	Over 30 to 45	Over 45 to 60	Over 60 to 75	Over 75 to 90	Over 90 to 105	Over 105 to 120					15 or less	Over 15 to 30	Over 30 to 45	Over 45 to 60	Over 60 to 75	Over 75 to 90
ø6	5.5	17	3	M3	M6	3	13	1.8	80.5	85.5	100.5	105.5	120.5	125.5	140.5	-	5	7	4.2	18.4	47.1	52.1	67.1	72.1	87.1	92.1
ø10	7	12.5	4	M4	M8×1.0	4	8	2.4	79	84	94	99	109	114	124	129	5	7	4.2	18.4	45.5	50.5	60.5	65.5	75.5	80.5
ø16	8	13	4	M5	M10×1.0	5	8.5	3.2	79	84	94	99	109	114	124	129	6	9	5.2	19.7	44.2	49.2	59.2	64.2	74.2	79.2

Symbol / Bore size (mm)								With switch																				
	LG		LH	LK	LR	LS	LT	T0,T5,T2,T3									T2W,T3W									P
								RD	HD								RD	HD								
	Over 90 to 105	Over 105 to 120							15 or less	Over 15 to 30	Over 30 to 45	Over 45 to 60	Over 60 to 75	Over 75 to 90	Over 90 to 105	Over 105 to 120		15 or less	Over 15 to 30	Over 30 to 45	Over 45 to 60	Over 60 to 75	Over 75 to 90	Over 90 to 105	Over 105 to 120		
ø6	107.1	-	9	7	22	32	1.6	2	12	17	32	37	52	57	72	-	4	13.5	18.5	33.5	38.5	53.5	58.5	73.5	-	5.5		
ø10	90.5	95.5	9	7	22	32	1.6	3.5	10.5	15.5	25.5	30.5	40.5	45.5	55.5	60.5	5.5	12.5	17.5	27.5	32.5	42.5	47.5	57.5	62.5	12.5		
ø16	89.2	94.2	14	10	29	42	2.3	3.5	12.5	17.5	27.5	32.5	42.5	47.5	57.5	62.5	5	14	19	29	34	44	49	59	64	15.5		

Dimensions

● Rod end flange type (FA)

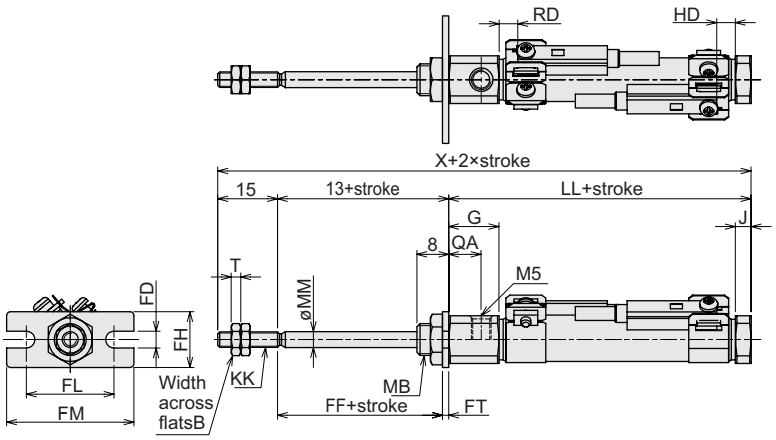

Note 1: The dimensions without switch are same as the ones with switch. (The magnet is not integrated.)
Note 2: The ø6 and ø10 port thread depth is 3.8 mm. When using a fitting, prepare a fitting with a thread length of 3.8 mm or less.
Note 3: Refer to page 51 for accessory dimensions.

Symbol / Bore size (mm)	Rod end flange basic dimensions																									
	B	D	G	J	KK	LL								MB	MM	QA	T	X								
						15 or less	Over 15 to 30	Over 30 to 45	Over 45 to 60	Over 60 to 75	Over 75 to 90	Over 90 to 105	Over 105 to 120					15 or less	Over 15 to 30	Over 30 to 45	Over 45 to 60	Over 60 to 75	Over 75 to 90	Over 90 to 105	Over 105 to 120
ø6	5.5	6.8	17	3	M3	52.5	57.5	72.5	77.5	92.5	97.5	112.5	-	M6	3	13	1.8	80.5	85.5	100.5	105.5	120.5	125.5	140.5	-
ø10	7	11	12.5	4	M4	51	56	66	71	81	86	96	101	M8×1.0	4	8	2.4	79	84	94	99	109	114	124	129
ø16	8	17.4	13	4	M5	51	56	66	71	81	86	96	101	M10×1.0	5	8.5	3.2	79	84	94	99	109	114	124	129

Symbol / Bore size (mm)	Mounting dimensions						With switch																		
	FD	FF	FH	FL	FM	FT	T0,T5,T2,T3									T2W,T3W									P
							RD	HD								RD	HD								
								15 or less	Over 15 to 30	Over 30 to 45	Over 45 to 60	Over 60 to 75	Over 75 to 90	Over 90 to 105	Over 105 to 120		15 or less	Over 15 to 30	Over 30 to 45	Over 45 to 60	Over 60 to 75	Over 75 to 90	Over 90 to 105	Over 105 to 120	
ø6	4.2	11.4	14	22	32	1.6	2	12	17	32	37	52	57	72	-	4	13.5	18.5	33.5	38.5	53.5	58.5	73.5	-	5.5
ø10	4.2	11.4	14	22	32	1.6	3.5	10.5	15.5	25.5	30.5	40.5	45.5	55.5	60.5	5.5	12.5	17.5	27.5	32.5	42.5	47.5	57.5	62.5	12.5
ø16	5.2	10.7	20	29	42	2.3	3.5	12.5	17.5	27.5	32.5	42.5	47.5	57.5	62.5	5	14	19	29	34	44	49	59	64	15.5

● Clevis bracket type (CB)

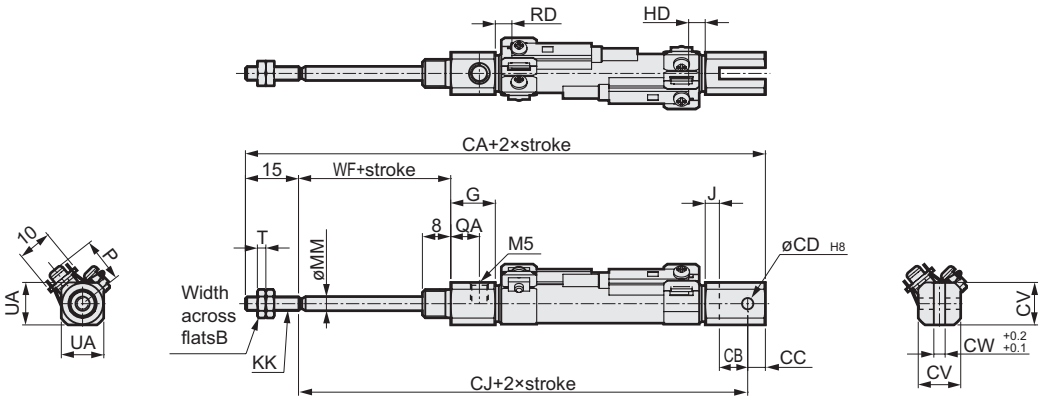

Note 1: The dimensions without switch are same as the ones with switch. (The magnet is not integrated.)
Note 2: The ø6 and ø10 port thread depth is 3.8 mm. When using a fitting, prepare a fitting with a thread length of 3.8 mm or less.
Note 3: Pin and fastener are attached.
Note 4: Refer to page 51 for accessory dimensions.

Symbol / Bore size (mm)	Clevis bracket type (CB) basic dimensions									Mounting dimensions																	
	B	D	G	J	KK	MM	QA	T	UA	CA								CB	CC	CD	CJ								CV
										15 or less	Over 15 to 30	Over 30 to 45	Over 45 to 60	Over 60 to 75	Over 75 to 90	Over 90 to 105	Over 105 to 120				15 or less	Over 15 to 30	Over 30 to 45	Over 45 to 60	Over 60 to 75	Over 75 to 90	Over 90 to 105	Over 105 to 120	
ø10	7	11	12.5	4	M4	4	8	2.4	12	94	106	118	130	142	154	166	178	8	5	3.2	74	86	98	110	122	134	146	158	12
ø16	8	17.4	13	4	M5	5	8.5	3.2	18	101	113	125	137	149	161	173	185	10	10	5	76	88	100	112	124	136	148	160	18

Symbol / Bore size (mm)										With switch																			
	CW	WF								T0,T5,T2,T3									T2W,T3W									P
										RD	HD								RD	HD								
		15 or less	Over 15 to 30	Over 30 to 45	Over 45 to 60	Over 60 to 75	Over 75 to 90	Over 90 to 105	Over 105 to 120		15 or less	Over 15 to 30	Over 30 to 45	Over 45 to 60	Over 60 to 75	Over 75 to 90	Over 90 to 105	Over 105 to 120		15 or less	Over 15 to 30	Over 30 to 45	Over 45 to 60	Over 60 to 75	Over 75 to 90	Over 90 to 105	Over 105 to 120	
ø10	3.2	15	22	24	31	33	40	42	49	3.5	10.5	15.5	25.5	30.5	40.5	45.5	55.5	60.5	5.5	12.5	17.5	27.5	32.5	42.5	47.5	57.5	62.5	12.5	
ø16	6.5	15	22	24	31	33	40	42	49	3.5	12.5	17.5	27.5	32.5	42.5	47.5	57.5	62.5	5	14	19	29	34	44	49	59	64	15.5	

Pencil shaped cylinder Double acting heat resistant type

SCPD3-T Series

● Bore size: ø6/ø10/ø16

JIS symbol

RoHS

Specifications

Descriptions		SCPD3-T		
Bore size	mm	ø6	ø10	ø16
Actuation		Double acting heat resistant type		
Working fluid		Compressed air		
Max. working pressure	MPa	1.0		
Min. working pressure	MPa	0.15	0.1	
Withstanding pressure	MPa	1.6		
Ambient temperature	°C	5 to 120		
Port size		M5		
Stroke tolerance	mm	+1.0 0		
Working piston speed	mm/s	50 to 750		
Cushion		Rubber cushion		
Lubrication		Not available		
Allowable energy absorption	J	0.012	0.041	0.162

Stroke length

Bore size (mm)		Standard stroke length (mm)	Max. stroke length (mm)	Min. stroke length (mm)
SCPD3-T	ø6	15/30/45/60	100	5
	ø10		200	
	ø16		260	

Note 1: The custom stroke length is available by 1mm increment.

Cylinder weight

(Unit: g)

Type	Descriptions / Bore size (mm)	Mounting bracket weight			Weight for 0mm stroke	Additional weight per 10mm stroke
		Foot type LS	Flange type FA	Clevis type CB		
SCPD3-T	ø6	6	4	-	13	1
	ø10	6	4	4	21	2
	ø16	15	12	10	42	3

(ex.) Product weight of SCPD3-T-LS-10-30

- Mounting bracket weight (foot type)..... 6g
- Weight for 0mm stroke 21g
- Additional weight for 30mm stroke.....2×30/10=6g
- Product weight.....6+21+6=33g

Dimensions

Same as double acting standard single rod type SCPD3 series. Refer to Pages 6 and 7.

How to order

SCPD3-T - 00 - 10 - 15 - O ——— Y

- Ⓐ Mounting style Note 1
- Ⓑ Bore size
- Ⓒ Stroke length
- Ⓓ Head end port direction Note 1
- Ⓔ Accessory Note 2

Symbol	Descriptions			
Ⓐ Mounting style				
	Bore size (ø)	6	10	16
00	Basic type	●	●	●
LS	One side axial foot type (rod end)	●	●	●
FA	Rod end flange type	●	●	●
CB	Clevis bracket type (pin and snap ring attached)		●	●

Ⓑ Bore size (mm)	
6	ø6
10	ø10
16	ø16

Ⓒ Stroke length (mm)			
Bore size	Stroke length	Available stroke length	Custom stroke length
ø6	**5 to 100**	**100**	By 1 mm increment
ø10	**5 to 200**	**200**	
ø16	**5 to 260**	**260**	

Ⓓ Head end port direction	
Blank	Vertical
O	Axial direction

Ⓔ Accessory				
	Mounting style (ø)	6	10	16
I	Rod eye		●	●
Y	Rod clevis (pin and snap ring attached)		●	●
B1	Eye bracket		●	●
B2	Clevis Bracket		●	●

Note on model no. selection

Note 1: Support type CB cannot be made for port orientation "0" axial.
Note 2: "I" and "Y" cannot be chosen at the same time.

<Example of model number>
SCPD3-T-00-10-30-O-I
Model: Pencil shaped heat resistant cylinder

Ⓐ Mounting style	: Basic type
Ⓑ Bore size	: ø10mm
Ⓒ Stroke length	: 30mm
Ⓓ Head end port direction	: Axial direction
Ⓔ Accessory	: Rod eye

How to order mounting bracket

Bore size (mm) / Mounting bracket	ø6	ø10	ø16
Foot (LS)	P2-LS-6	P2-LS-10	P2-LS-16
Flange (FA)	P2-FA-6	P2-FA-10	P2-FA-16

Note: 1pc. / set is applied for a foot (LS) type mounting bracket.

Internal structure and parts list

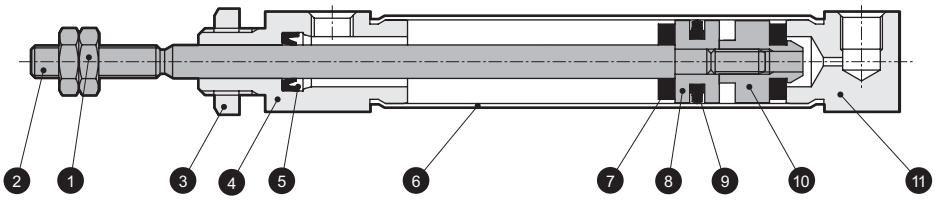

● Cannot be disassembled due to caulked structure.

No.	Part name	Material	Remarks	No.	Part name	Material	Remarks
1	Rod nut	Steel	Nickeling	7	Cushion rubber	Fluorine rubber	
2	Piston rod	Stainless steel		8	Piston	Aluminum alloy	
3	Hexagon nut	Steel	Nickeling	9	Piston packing seal	Fluorine rubber	
4	Rod cover	Aluminum alloy	Hard alumite	10	Spacer	Aluminum alloy	
5	Rod packing seal	Fluorine rubber		11	Head cover	Aluminum alloy	Hard alumite
6	Cylinder tube	Stainless steel					

Pencil shaped cylinder Double acting rubber cushioned

SCPD3-*C Series

● Bore size: ø6/ø10/ø16

JIS symbol

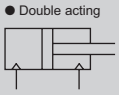

RoHS

Specifications

Descriptions		SCPD3-*C, SCPD3-L-*C		
Bore size	mm	ø6	ø10	ø16
Actuation		Double acting		
Working fluid		Compressed air		
Max. working pressure	MPa	1.0		
Min. working pressure	MPa	0.3		0.2
Withstanding pressure	MPa	1.6		
Ambient temperature	°C	-10 to 60 (no freezing)		
Port size		M5		
Stroke tolerance	mm	+1.0 0		
Working piston speed	mm/s	50 to 750 (Use within the allowable energy absorption range.)		
Cushion		Rubber air cushion		
Lubrication		Not required (when lubricating, use turbine oil Class 1 ISO VG32.)		
Allowable energy absorption	J	0.012	0.041	0.162

Stroke length

Bore size (mm)	Standard stroke length (mm)	Max. stroke length (mm)	Min. stroke length (mm)
ø6	15/30/45/60	100	5
ø10		200	
ø16		260	

Note 1: The custom stroke length is available by 1mm increment.

Minimum stroke length with switch

	One		Two	
Schematic	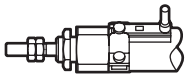	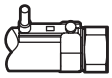	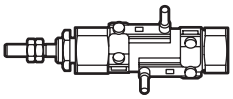	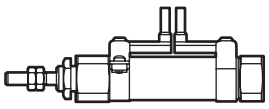
	Rod side installation	Head side installation	Different surface installation	Same surface installation
Min. stroke length	5mm		10mm	28mm

■ Rubber air cushion mechanism

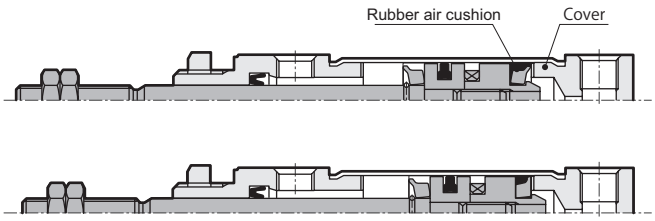

Explained when pulled

When the piston moves and the rubber-air cushion and cover contact, a sealed air space is formed in the shaded section. The air in the shaded section is compressed as the piston moves, and energy is absorbed. Energy absorbed by the rubber air cushion's compression strain is also calculated at the stroke end.

Impact noise level drop data (example)

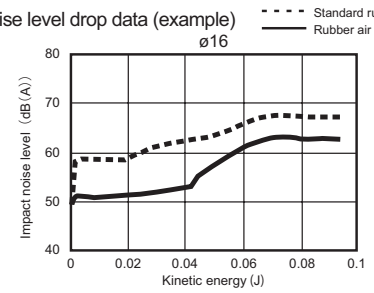

Collision acceleration level drop data (example)

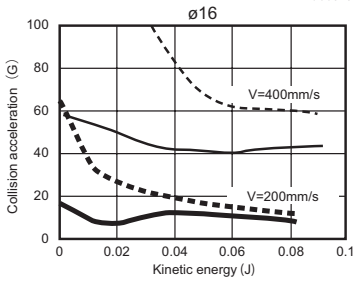

Switch specifications

Descriptions	Proximity 2 wire		Proximity 3 wire	
	T2H/T2V	T2WH/T2WV	T3H/T3V	T3WH/T3WV
Applications	Programmable controller		Programmable controller, relay	
Output method	-		NPN output	
Power voltage	-		10 to 28VDC	
Load voltage	10 to 30VDC	24VDC±10%	30VDC or less	
Load current	5 to 20mA		100mA or less	50mA or less
Light	LED (ON lighting)	Red/green LED (ON lighting)	LED (ON lighting)	Red/green LED (ON lighting)
Leakage current	1mA or less		10 μA or less	
Weight g	1m:18 3m:49 5m:80		1m:18 3m:49 5m:80	

Descriptions	Reed 2 wire			
	T0H/T0V		T5H/T5V	
Applications	Programmable controller, relay		Programmable controller, relay IC circuit (without light), serial connection	
Load voltage	12/24VDC	110VAC	5/12/24VDC	110VAC
Load current	5 to 50mA	7 to 20mA	50mA or less	20mA or less
Light	LED (ON lighting)		Without indicator light	
Leakage current	0mA		0mA	
Weight g	1m:18 3m:49 5m:80		1m:18 3m:49 5m:80	

Cylinder weight

(Unit: g)

Type	Descriptions / Bore size (mm)	Mounting bracket weight: Foot type LS	Mounting bracket weight: Flange type FA	Mounting bracket weight: Clevis type CB	Weight for 0mm stroke	Additional weight per 10mm stroke	Switch weight (per switch)	Mounting bracket Weight
SCPD3-*C	ø6	6	4	-	13	1	Refer to weight written on switch specifications.	2
	ø10	6	4	4	21	2		
	ø16	15	12	10	42	3		

(ex.) Product weight of SCPD3-L-LS-10C-30-T0H-D

- Mounting bracket weight (foot type) 6g
- Weight for 0mm stroke 21g
- Additional weight for 30mm stroke ..... 2×30/10=6g
- Switch weight ..... 2×(18+2)=40g
- Product weight..... 6+21+6+40=73g

How to order

Without switch

SCPD3 – 00 – 10C – 15 – O ——— I

With switch

SCPD3-L – 00 – 10C – 15 – O – T2H – R – I

Ⓐ Mounting style Note 1

Ⓑ Bore size

Rubber cushioned

Ⓒ Stroke length

Ⓓ Head end port direction Note 1

Ⓔ Switch model no. Note 3 * indicates cable length.

Ⓕ Switch quantity

Ⓖ Option/ Accessory Note 4

Symbol	Descriptions			
Ⓐ Mounting style				
	Bore size(ø)	6	10	16
00	Basic type	●	●	●
LS	One side axial foot type (rod end)	●	●	●
FA	Rod end flange type	●	●	●
CB	Clevis bracket type		●	●

Ⓑ Bore size (mm)	
6	ø6
10	ø10
16	ø16

Ⓒ Stroke length (mm)		
Bore size	Stroke length Note 2	Custom stroke length
ø6	**5 to 100**	By 1 mm increment
ø10	**5 to 200**	
ø16	**5 to 260**	

Ⓓ Head end port direction	
Blank	Vertical
O	Axial direction

Ⓔ Switch model no.

Lead wire Axial	L-type lead wire	Connection	Voltage AC	Voltage DC	Indicator	Lead wire
T0H*	**T0V***	Reed	●	●	One color indicator type	2 wire
T5H*	**T5V***		●	●	Without indicator light	
T2H*	**T2V***	Proximity		●	One color indicator type	2 wire
T3H*	**T3V***			●		3 wire
T2WH*	**T2WV***			●	Two color indicator type	2 wire
T3WH*	**T3WV***			●		3 wire

***Lead wire length**	
Blank	1m (standard)
3	3m (option)
5	5m (option)

Ⓕ Switch quantity	
R	One on rod end
H	One on head end
D	Two
T	Three

Ⓖ Option/accessory				
	Mounting style(ø)	6	10	16
I	Rod eye		●	●
Y	Rod clevis (pin and snap ring attached)		●	●
B1	Eye bracket		●	●
B2	Clevis bracket		●	●

⚠ Note on model no. selection

Note 1: CB cannot be made for port direction “0”.
Note 2: Refer to page 21 for min. stroke length with switch.
Note 3: Magnet is not integrated for types without switch.
Note 4: “I” and “Y” cannot be chosen at the same time.
Note 5: Copper and PTFE free as standard.
Note 6: Switches will be attached with cylinders when shipping.

<Example of model number>
SCPD3-L-00-10C-15-O-T2H-R-I
Model: Pencil shaped cylinder Double acting rubber cushioned

Ⓐ Mounting style	: Basic type
Ⓑ Bore size	: ø10mm
Ⓒ Stroke length	: 15mm
Ⓓ Head end port direction	: Axial direction
Ⓔ Switch model no.	: Proximity switch T2H, lead wire 1m
Ⓕ Switch quantity	: One on rod end
Ⓖ Accessory	: Rod eye

How to order switch

● Switch + mounting bracket set

SCPD3 - T0H - 6

Bore size
(previous page, point “C”)

Switch model no.
(previous page, point “F”)

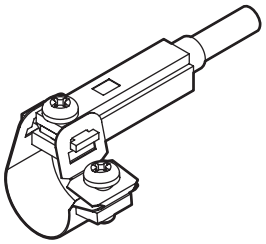

● Switch (with fixing bracket)

SCPD3 - T0H

Switch model no.
(previous page,
point “F”)

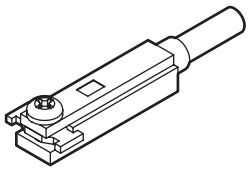

Note) The small cross pan head screw for the fixed bracket differs from the T-type standard switch.

● Mounting bracket set + fixing bracket

SCPD3 - TS - 6

Bore size
(previous page,
point “C”)

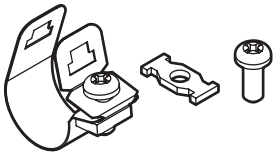

Orders of 20 or more are packaged as a set.

● Mounting bracket set

SCPD3 - T - 6

Bore size
(previous page,
point “C”)

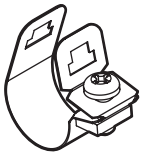

Orders of 20 or more are packaged as a set.

How to order mounting bracket

Bore size (mm) / Mounting bracket	ø6	ø10	ø16
Foot (LS)	P2-LS-6	P2-LS-10	P2-LS-16
Flange (FA)	P2-FA-6	P2-FA-10	P2-FA-16

Note: 1pc. / set is applied for a foot (LS) type mounting bracket.

Internal structure and parts list

● Rubber cushioned
SCPD3-*C
SCPD3-L-*C (with switch)

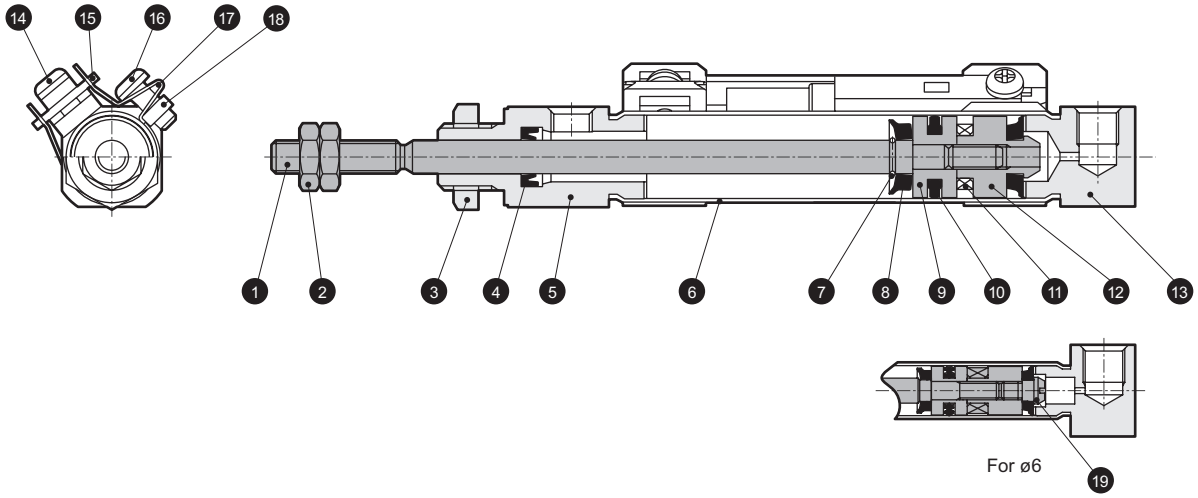

● This product cannot be disassembled.

No.	Part name	Material	Remarks	No.	Part name	Material	Remarks
1	Piston rod	Stainless steel		11	Magnet	-	Only with switch
2	Rod nut	Steel	Nickeling	12	Spacer	Aluminum alloy	
3	Hexagon nut	Steel	Nickeling	13	Head cover	Aluminum alloy	Hard alumite
4	Rod packing seal	Nitrile rubber		14	Small cross pan head thread	Stainless steel	Only with switch
5	Rod cover	Aluminum alloy	Hard alumite	15	Bracket	Stainless steel	Only with switch
6	Cylinder tube	Stainless steel		16	Small cross pan head thread	Stainless steel	Only with switch
7	Retaining ring	Stainless steel		17	Band	Stainless steel	Only with switch
8	Rubber air cushion	Special rubber		18	Fixing nut	Stainless steel	Only with switch
9	Piston	Aluminum alloy		19	Pin	Stainless steel	Only ø6
10	Piston packing seal	Nitrile rubber					

Dimensions

Same as double acting standard single rod type SCPD3 series. Refer to Pages 6 and 7.

Technical data

[Functional comparison of impact noise levels]

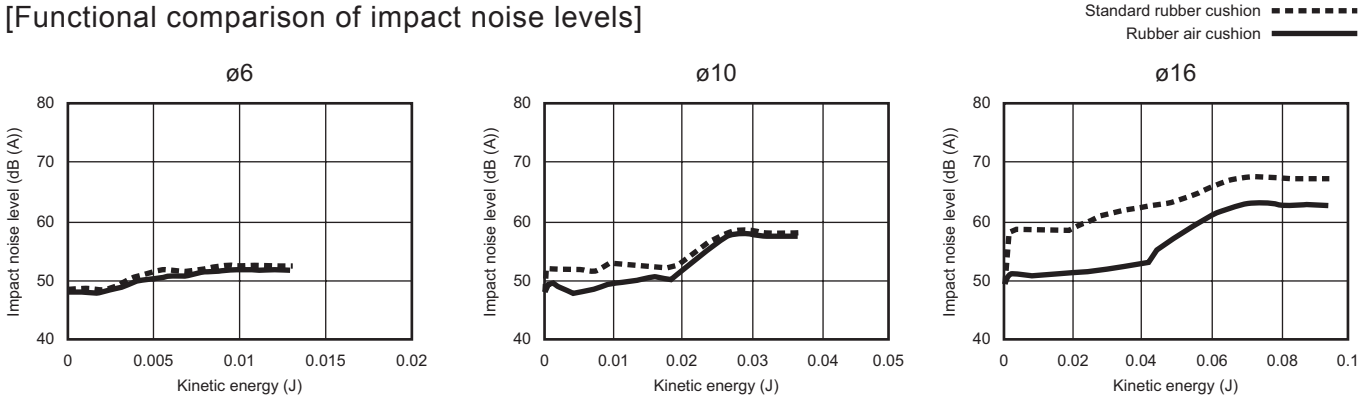

[Functional comparison of impact acceleration]

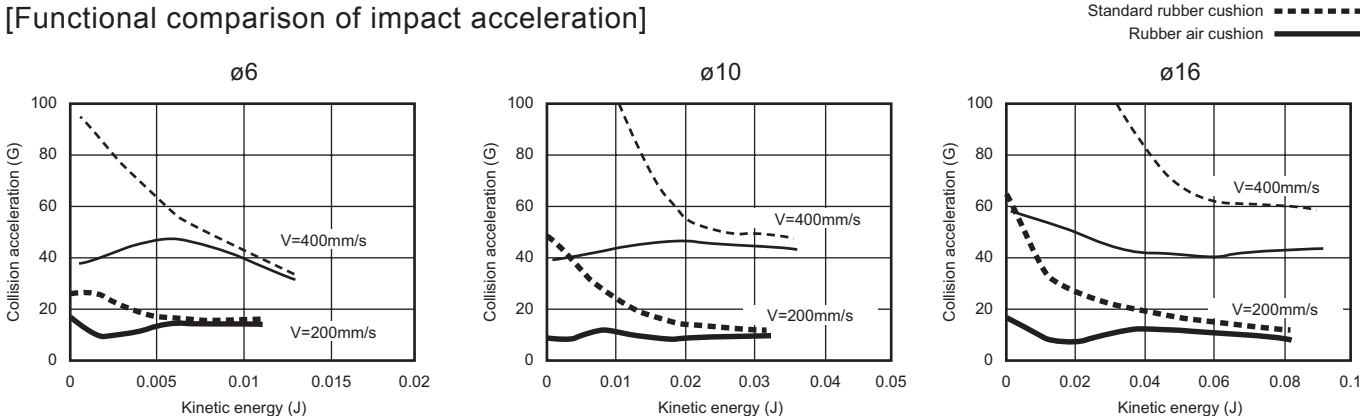

[Recommended energy ranges]

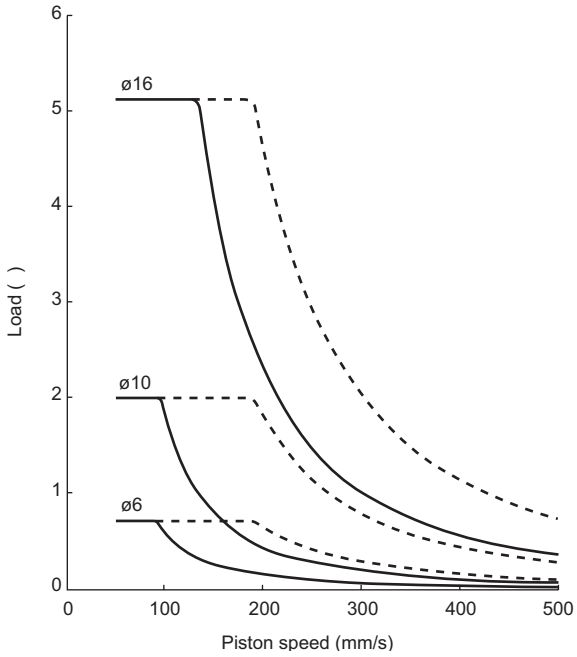

Can be used in the lower left range of the curve.
Use is possible within the range shown with the --- line in the graph, but to effectively use the silencing effect, the product should be used within the range shown by the solid line.

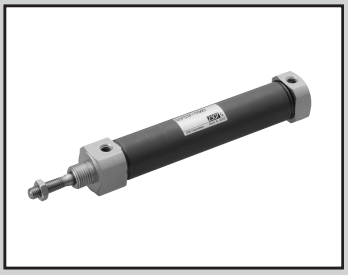

Pencil shaped cylinder Double acting fine speed type

SCPD3-F Series

● Bore size: ø6/ø10/ø16

JIS symbol

RoHS

Specifications

Descriptions		SCPD3-F/SCPD3-LF (With switch)		
Bore size	mm	ø6	ø10	ø16
Actuation		Double acting		
Working fluid		Compressed air		
Max. working pressure	MPa	1.0		
Min. working pressure	MPa	0.15	0.1	
Withstanding pressure	MPa	1.6		
Ambient temperature	°C	5 to 60		
Port size		M5		
Stroke tolerance	mm	+1.0 0		
Working piston speed	mm/s	1 to 200		
Cushion		Rubber cushion		
Lubrication		Not available		
Allowable energy absorption	J	0.012	0.041	0.162

Stroke length

Bore size (mm)		Standard stroke length (mm)	Max. stroke length (mm)	Min. stroke length (mm)
SCPD3-F SCPD3-LF	ø6	15/30/45/60	100	5
	ø10		200	
	ø16		260	

Note 1: The custom stroke length is available by 1mm increment.

Minimum stroke length with switch

	One		Two	
Schematic	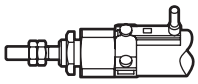	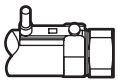	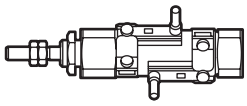	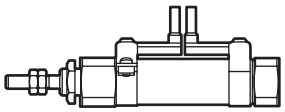
	Rod side installation	Head side installation	Different surface installation	Same surface installation
Min. stroke length	5mm		10mm	28mm

Dimensions

Same as double acting standard single rod type SCPD3 series. Refer to Pages 6 and 7.

Technical data

Refer to Pneumatic cylinders I (CB-029S-7) SSD-F Series for measuring methods.

Switch specifications

Descriptions	Proximity 2 wire		Proximity 3 wire	
	T2H/T2V	T2WH/T2WV	T3H/T3V	T3WH/T3WV
Applications	Programmable controller		Programmable controller, relay	
Output method	-		NPN output	
Power voltage	-		10 to 28VDC	
Load voltage	10 to 30VDC	24VDC±10%	30VDC or less	
Load current	5 to 20mA		100mA or less	50mA or less
Light	LED (ON lighting)	Red/green LED (ON lighting)	LED (ON lighting)	Red/green LED (ON lighting)
Leakage current	1mA or less		10 μA or less	
Weight g	1m:18 3m:49 5m:80		1m:18 3m:49 5m:80	

Descriptions	Reed 2 wire			
	T0H/T0V		T5H/T5V	
Applications	Programmable controller, relay		Programmable controller, relay IC circuit (without light), serial connection	
Load voltage	12/24VDC	110VAC	5/12/24VDC	110VAC
Load current	5 to 50mA	7 to 20mA	50mA or less	20mA or less
Light	LED (ON lighting)		Without indicator light	
Leakage current	0mA		0mA	
Weight g	1m:18 3m:49 5m:80		1m:18 3m:49 5m:80	

Cylinder weight

(Unit: g)

Type	Descriptions / Bore size (mm)	Mounting bracket weight: Foot type LS	Mounting bracket weight: Flange type FA	Mounting bracket weight: Clevis type CB	Weight for 0mm stroke	Additional weight per 10mm stroke	Switch weight (per switch)	Bracket weight
SCPD3-F	ø6	6	4	-	13	1	Refer to weight written on switch specifications.	2
	ø10	6	4	4	21	2		
	ø16	15	12	10	42	3		

(ex.) Product weight of SCPD3-LF-LS-10-30-T0H-D

- Mounting bracket weight (foot type) 6g
- Weight for 0mm stroke 21g
- Additional weight for 30mm stroke ..... 2×30/10=6g
- Switch weight ..... 2× (18+2)=40g
- Product weight..... 6+21+6+40=73g

How to order

Without switch

SCPD3-F - LS - 10 - 15 ——— I

With switch

SCPD3-LF - LS - 10 - 15 - T2H - R - I

Model no.

Ⓐ Mounting style

Ⓑ Bore size

Ⓒ Stroke length

Ⓓ Switch model no. Note 2
* indicates cable length.

Ⓔ Switch quantity

Ⓕ Accessory Note 3

Symbol	Descriptions			
Ⓐ Mounting style				
	Bore size (ø)	6	10	16
00	Basic type	●	●	●
LS	One side axial foot type (rod end)	●	●	●
FA	Rod end flange type	●	●	●
CB	Clevis bracket type (pin and snap ring attached)		●	●

Ⓑ Bore size (mm)	
6	ø6
10	ø10
16	ø16

Ⓒ Stroke length (mm)		
Bore size	Stroke length Note 1	Custom stroke length
ø6	**5 to 100**	By 1 mm increment
ø10	**5 to 200**	
ø16	**5 to 260**	

Ⓓ Switch model no.

Lead wire Axial	L-type lead wire	Connection	Voltage AC	Voltage DC	Indicator	Lead wire
T0H*	**T0V***	Reed	●	●	One color indicator type	2 wire
T5H*	**T5V***		●	●	Without indicator light	
T2H*	**T2V***	Proximity		●	One color indicator type	2 wire
T3H*	**T3V***			●		3 wire
T2WH*	**T2WV***			●	Two color indicator type	2 wire
T3WH*	**T3WV***			●		3 wire

***Lead wire length**	
Blank	1m (standard)
3	3m (option)
5	5m (option)

Ⓔ Switch quantity	
R	One on rod end
H	One on head end
D	Two
T	Three

Ⓕ Accessory				
	Mounting style (ø)	6	10	16
I	Rod eye		●	●
Y	Rod clevis (pin and snap ring attached)		●	●
B1	Eye bracket		●	●
B2	Clevis bracket		●	●

Note on model no. selection

Note 1: Refer to page 27 for min. stroke length with switch.
Note 2: Magnet is not integrated for types without switch.
Note 3: "I" and "Y" cannot be chosen at the same time.
Note 4: Switches will be attached with cylinders when shipping.

<Example of model number>
SCPD3-LF-LS-10-15-T2H-R-I
Model: Pencil shaped cylinder Fine speed type

Ⓐ Mounting style : One side axial foot type (rod end)
Ⓑ Bore size : ø10mm
Ⓒ Stroke length : 15mm
Ⓓ Switch model no. : Proximity switch T2H, lead wire 1m
Ⓔ Switch quantity : One on rod end
Ⓕ Accessory : Rod eye

How to order switch

● Switch + mounting bracket set

SCPD3 - T0H - 6

Bore size
(previous page, point “C”)

Switch model no.
(previous page, point “F”)

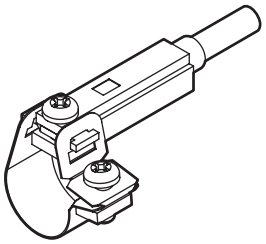

● Switch (with fixing bracket)

SCPD3 - T0H

Switch model no.
(previous page, point “F”)

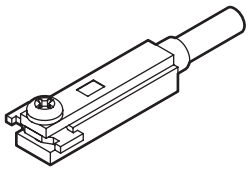

Note) The small cross pan head screw for the fixed bracket differs from the T-type standard switch.

● Mounting bracket set + fixing bracket

SCPD3 - TS - 6

Bore size
(previous page, point “C”)

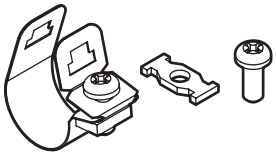

Orders of 20 or more are packaged as a set.

● Mounting bracket set

SCPD3 - T - 6

Bore size
(previous page, point “C”)

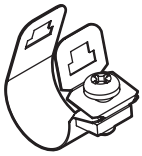

Orders of 20 or more are packaged as a set.

How to order mounting bracket

Bore size (mm) / Mounting bracket	ø6	ø10	ø16
Foot (LS)	P2-LS-6	P2-LS-10	P2-LS-16
Flange (FA)	P2-FA-6	P2-FA-10	P2-FA-16

Note: 1pc. / set is applied for a foot (LS) type mounting bracket.

Pencil shaped cylinder Double acting low speed type

SCPD3-O Series

Bore size: ø6/ø10/ø16

JIS symbol

RoHS

Specifications

Descriptions		SCPD3-O SCPD3-OL		
Bore size	mm	ø6	ø10	ø16
Actuation		Double acting low speed type		
Working fluid		Compressed air		
Max. working pressure	MPa	1.0		
Min. working pressure	MPa	0.15	0.1	
Withstanding pressure	MPa	1.6		
Ambient temperature	°C	-10 to 60 (no freezing)		
Port size		M5		
Stroke tolerance	mm	+1.0 0		
Working piston speed	mm/s	10 to 200		
Cushion		Rubber cushion		
Lubrication		Not available		
Allowable energy absorption	J	0.012	0.041	0.162

Stroke length

Bore size (mm)		Standard stroke length (mm)	Max. stroke length (mm)	Min. stroke length (mm)
SCPD3-O	ø6	15/30/45/60	100	5
	ø10		200	
	ø16		260	

Note 1: The custom stroke length is available by 1mm increment.

Minimum stroke length with switch

	One		Two	
Schematic	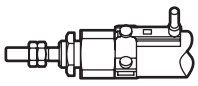	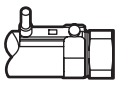	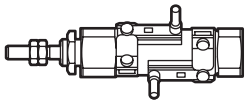	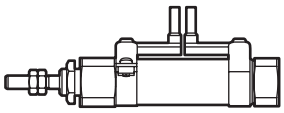
	Rod side installation	Head side installation	Different surface installation	Same surface installation
Min. stroke length	5mm		10mm	28mm

Switch specifications

Descriptions	Proximity 2 wire		Proximity 3 wire	
	T2H/T2V	T2WH/T2WV	T3H/T3V	T3WH/T3WV
Applications	Programmable controller		Programmable controller, relay	
Output method	-		NPN output	
Power voltage	-		10 to 28VDC	
Load voltage	10 to 30VDC	24VDC±10%	30VDC or less	
Load current	5 to 20mA		100mA or less	50mA or less
Light	LED (ON lighting)	Red/green LED (ON lighting)	LED (ON lighting)	Red/green LED (ON lighting)
Leakage current	1mA or less		10 μA or less	
Weight g	1m:18 3m:49 5m:80		1m:18 3m:49 5m:80	

Descriptions	Reed 2 wire			
	T0H/T0V		T5H/T5V	
Applications	Programmable controller, relay		Programmable controller, relay IC circuit (without light), serial connection	
Load voltage	12/24VDC	110VAC	5/12/24VDC	110VAC
Load current	5 to 50mA	7 to 20mA	50mA or less	20mA or less
Light	LED (ON lighting)		Without indicator light	
Leakage current	0mA		0mA	
Weight g	1m:18 3m:49 5m:80		1m:18 3m:49 5m:80	

Cylinder weight

(Unit: g)

Type	Descriptions / Bore size (mm)	Mounting bracket weight: Foot type LS	Mounting bracket weight: Flange type FA	Mounting bracket weight: Clevis type CB	Weight for 0mm stroke	Additional weight per 10mm stroke	Switch weight (per switch)	Bracket weight
SCPD3-O	ø6	6	4	-	13	1	Refer to weight written on switch specifications.	2
	ø10	6	4	4	21	2		
	ø16	15	12	10	42	3		

(ex.) Product weight of SCPD3-OL-LS-10-30-T0H-D

- Mounting bracket weight(Foot type) 6g
- Weight for 0mm stroke 21g
- Additional weight for 30mm stroke.....2×30/10=6g
- Switch weight..... 2× (18+2)=40g
- Product weight .....6+21+6+40=73g

How to order

Without switch

SCPD3-O - 00 - 10 - 15 - O ———— Y

With switch

SCPD3-OL - 00 - 10 - 15 - O - T2H - R - Y

Ⓐ Model no.

Ⓑ Mounting style Note 1

Ⓒ Bore size

Ⓓ Stroke length

Ⓔ Head end port direction Note 1

Ⓕ Switch model no. Note 3 * indicates cable length.

Ⓖ Switch quantity

Ⓗ Accessory Note 4

Symbol	Descriptions
Ⓐ Model no.	
SCPD3-O	Double acting low speed type
SCPD3-OL	Double acting low speed type with switch

Ⓑ Mounting style

Bore size (ø)		6	10	16
00	Basic type	●	●	●
LS	One side axial foot type (rod end)	●	●	●
FA	Rod end flange type	●	●	●
CB	Clevis bracket type (pin and snap ring attached)		●	●

Ⓒ Bore size (mm)

6	ø6
10	ø10
16	ø16

Ⓓ Stroke length (mm)

Bore size	Stroke length Note 2	Custom stroke length
ø6	**5 to 100**	By 1 mm increment
ø10	**5 to 200**	
ø16	**5 to 260**	

Ⓔ Head end port direction

Blank	Vertical
O	Axial direction

Ⓕ Switch model no.

Lead wire Axial	L-type lead wire	Connection	Voltage AC	Voltage DC	Indicator	Lead wire
T0H*	**T0V***	Reed	●	●	One color indicator type	2 wire
T5H*	**T5V***		●	●	Without indicator light	
T2H*	**T2V***	Proximity		●	One color indicator type	2 wire
T3H*	**T3V***			●		3 wire
T2WH*	**T2WV***			●	Two color indicator type	2 wire
T3WH*	**T3WV***			●		3 wire

*** Lead wire length**

Blank	1m (standard)
3	3m (option)
5	5m (option)

Ⓖ Switch quantity

R	One on rod end
H	One on head end
D	Two
T	Three

Ⓗ Accessory

Mounting style (ø)		6	10	16
I	Rod eye		●	●
Y	Rod clevis (pin and snap ring attached)		●	●
B1	Eye bracket		●	●
B2	Clevis bracket		●	●

Note on model no. selection

Note 1: Support type CB cannot be made for port orientation "0" axial.
Note 2: Refer to page 31 for min. stroke length with switch.
Note 3: Magnet is not integrated for types without switch.
Note 4: "I" and "Y" cannot be chosen at the same time.
Note 5: Switches will be attached with cylinders when shipping.

<Example of model number>
SCPD3-OL-00-10-30-O-T2H-R-I
Model: Pencil shaped cylinder

Ⓐ Model no.	: Double acting low speed type
Ⓑ Mounting style	: Basic type
Ⓒ Bore size	: ø10mm
Ⓓ Stroke length	: 30mm
Ⓔ Head end port direction	: Axial direction
Ⓕ Switch model no.	: Proximity switch T2H, lead wire 1m
Ⓖ Switch quantity	: One on rod end
Ⓗ Accessory	: Rod eye

Head cover side port direction

The cover-side pipe port orientation for mounting types 00, LB, and FA is available in vertical or horizontal for axial types.

How to order switch

● Switch + mounting bracket set

SCPD3 - T0H - 6

Bore size (previous page, point "C")

Switch model no. (previous page, point "F")

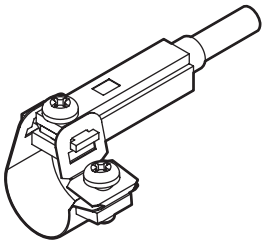

● Switch (with fixing bracket)

SCPD3 - T0H

Switch model no. (previous page, point "F")

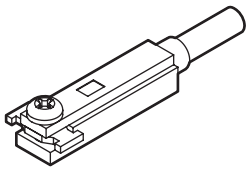

Note) The small cross pan head screw for the fixed bracket differs from the T-type standard switch.

● Mounting bracket set + fixing bracket

SCPD3 - TS - 6

Bore size (previous page, point "C")

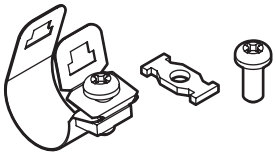

Orders of 20 or more are packaged as a set.

● Mounting bracket set

SCPD3 - T - 6

Bore size (previous page, point "C")

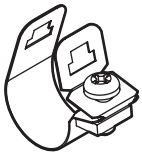

Orders of 20 or more are packaged as a set.

How to order mounting bracket

Bore size (mm) / Mounting bracket	ø6	ø10	ø16
Foot (LS)	P2-LS-6	P2-LS-10	P2-LS-16
Flange (FA)	P2-FA-6	P2-FA-10	P2-FA-16

Note: 1pc. / set is applied for a foot (LS) type mounting bracket.

Dimensions

Same as double acting SCPD3 series. Refer to Pages 6 and 7.

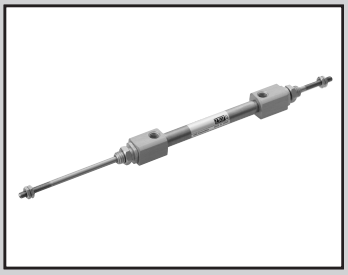

Pencil shaped cylinder Double acting double rod type

SCPD3-D Series

● Bore size: ø6/ø10/ø16

JIS symbol

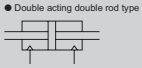

RoHS

Specifications

Descriptions		SCPD3-D SCPD3-DL		
Bore size	mm	ø6	ø10	ø16
Actuation		Double acting double rod type		
Working fluid		Compressed air		
Max. working pressure	MPa	1.0		
Min. working pressure	MPa	0.2	0.1	
Withstanding pressure	MPa	1.6		
Ambient temperature	°C	-10 to 60 (no freezing)		
Port size		M5		
Stroke tolerance	mm	+1.0 0		
Working piston speed	mm/s	50 to 750		
Cushion		Rubber cushion		
Lubrication		Not required (when lubricating, use turbine oil Class 1 ISO VG32.)		
Allowable energy absorption	J	0.012	0.041	0.162

Stroke length

Bore size (mm)	Standard stroke length (mm)	Max. stroke length (mm)	Min. stroke length (mm)
ø6	15/30/45/60	60	5
ø10		120	
ø16			

Note 1: The custom stroke length is available by 1mm increment.

Minimum stroke length with switch

	One		Two	
Schematic	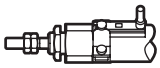	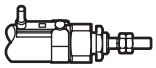	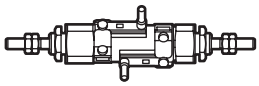	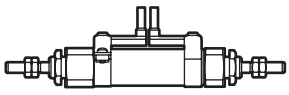
	Rod side installation	Head side installation	Different surface installation	Same surface installation
Min. stroke length	5mm		10mm	28mm

Switch specifications

Descriptions	Proximity 2 wire		Proximity 3 wire	
	T2H/T2V	T2WH/T2WV	T3H/T3V	T3WH/T3WV
Applications	Programmable controller		Programmable controller, relay	
Output method	-		NPN output	
Power voltage	-		10 to 28VDC	
Load voltage	10 to 30VDC	24VDC±10%	30VDC or less	
Load current	5 to 20mA		100mA or less	50mA or less
Light	LED (ON lighting)	Red/green LED (ON lighting)	LED (ON lighting)	Red/green LED (ON lighting)
Leakage current	1mA or less		10 μA or less	
Weight g	1m:18 3m:49 5m:80		1m:18 3m:49 5m:80	

Descriptions	Reed 2 wire			
	T0H/T0V		T5H/T5V	
Applications	Programmable controller, relay		Programmable controller, relay IC circuit (without light), serial connection	
Load voltage	12/24VDC	110VAC	5/12/24VDC	110VAC
Load current	5 to 50mA	7 to 20mA	50mA or less	20mA or less
Light	LED (ON lighting)		Without indicator light	
Leakage current	0mA		0mA	
Weight g	1m:18 3m:49 5m:80		1m:18 3m:49 5m:80	

Cylinder weight

(Unit: g)

Type	Descriptions / Bore size (mm)	Mounting bracket weight			Weight for 0mm stroke	Additional weight per 10mm stroke	Switch weight (per switch)	Bracket weight
		Foot type LS	Foot type LB	Flange type FA				
SCPD3-D SCPD3-DT	ø6	6	12	4	18	2	Refer to weight written on switch specifications.	2
	ø10	6	12	4	28	3		
	ø16	15	30	12	55	5		

(ex.) Product weight of SCPD3-DL-LS-10-30-T0H-D

- Mounting bracket weight(Foot type) 6g
- Weight for 0mm stroke 28g
- Additional weight for 30mm stroke.....2×3/10=9g
- Switch weight..... 2× (18+2)=40g
- Product weight.....6+28+9+40=83g

How to order

Without switch

SCPD3-D - LS - 10 - 15 ——— I

With switch

SCPD3-DL - LS - 10 - 15 - T2H - R - I

Ⓐ Model no.

Ⓑ Mounting style

Ⓒ Bore size

Ⓓ Stroke length

Ⓔ Switch model no. Note 2 * indicates cable length.

Ⓕ Switch quantity

Ⓖ Accessory

Symbol	Descriptions			
Ⓑ Mounting style				
	Bore size (ø)	6	10	16
00	Basic type	●	●	●
LS	One side axial foot type (rod end)	●	●	●
LB	Double axial foot type	●	●	●
FA	Rod end flange type	●	●	●

Ⓒ Bore size (mm)	
6	ø6
10	ø10
16	ø16

Ⓓ Stroke length(mm)		
Bore size	Stroke lengthNote 1	Custom stroke length
ø6	**5 to 60**	By 1 mm increment
ø10	**5 to 120**	
ø16	**5 to 120**	

Ⓔ Switch model no.

Lead wire Axial	L-type lead wire	Connection	Voltage AC	Voltage DC	Indicator	Lead wire
T0H*	**T0V***	Reed	●	●	One color indicator type	2 wire
T5H*	**T5V***		●	●	Without indicator light	
T2H*	**T2V***	Proximity		●	One color indicator type	2 wire
T3H*	**T3V***			●		3 wire
T2WH*	**T2WV***			●	Two color indicator type	2 wire
T3WH*	**T3WV***			●		3 wire

*** Lead wire length**	
Blank	1m (standard)
3	3m (option)
5	5m (option)

Ⓕ Switch quantity	
R	One on rod end
H	One on head end
D	Two
T	Three

Ⓖ Accessory

	Mounting style (ø)	6	10	16
I	Rod eye		●	●
Y	Rod clevis (pin and snap ring attached)		●	●

Note on model no. selection

Note 1: Refer to page 35 for min. stroke length with switch.
Note 2: Magnet is not integrated for types without switch.
Note 3: SCPD3-D is copper and PTFE free as standard.
Note 4: Switches will be attached with cylinders when shipping.

<Example of model number>
SCPD3-DL-LS-10-15-T2H-R-I
Model: Pencil shaped cylinder Double rod type

Ⓐ Model no. : Pencil shaped cylinder Double rod type
Ⓑ Mounting style : One side axial foot type (rod end)
Ⓒ Bore size : ø10mm
Ⓓ Stroke length : 15mm
Ⓔ Switch model no. : Proximity switch T2H, lead wire 1m
Ⓕ Switch quantity : One on rod end
Ⓖ Accessory : Rod eye

How to order mounting bracket

Bore size (mm) / Mounting bracket	ø6	ø10	ø16
Foot (LS)	P2-LS-6	P2-LS-10	P2-LS-16
Foot (LB)	P2-LB-6	P2-LB-10	P2-LB-16
Flange (FA)	P2-FA-6	P2-FA-10	P2-FA-16

Note: 1pc. / set is applied for a foot (LS) type mounting bracket.

How to order switch

● Switch + mounting bracket set

SCPD3 - T0H - 6

Bore size
(previous page, point “C”)

Switch model no.
(previous page, point “F”)

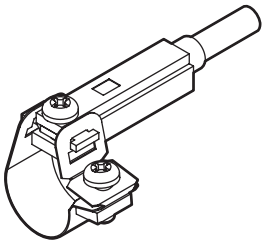

● Switch (with fixing bracket)

SCPD3 - T0H

Switch model no.
(previous page, point “F”)

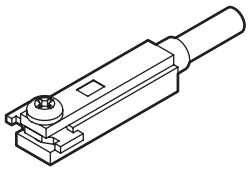

Note) The small cross pan head screw for the fixed bracket differs from the T-type standard switch.

● Mounting bracket set + fixing bracket

SCPD3 - TS - 6

Bore size
(previous page, point “C”)

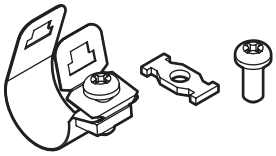

Orders of 20 or more are packaged as a set.

● Mounting bracket set

SCPD3 - T - 6

Bore size
(previous page, point “C”)

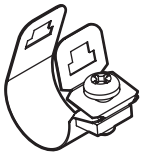

Orders of 20 or more are packaged as a set.

Internal structure and parts list

● Double rod type
SCPD3-D
SCPD3-DL (With switch)

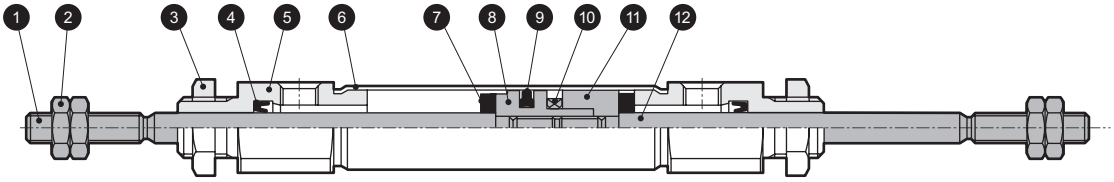

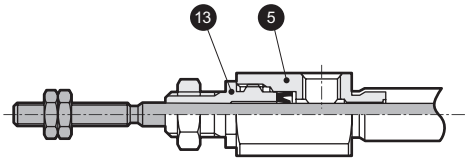

For ø6

● This product cannot be disassembled.

No.	Part name	Material	Remarks	No.	Part name	Material	Remarks
1	Piston rod 1	Stainless steel		8	Piston	Aluminum alloy	
2	Rod nut	Steel	Nickeling	9	Piston packing seal	Nitrile rubber	
3	Hexagon nut	Steel	Nickeling	10	Magnet	-	Only with switch
4	Rod packing seal	Nitrile rubber		11	Spacer	Aluminum alloy	
5	Rod cover	Aluminum alloy	Hard alumite	12	Piston rod 2	Stainless steel	
6	Cylinder tube	Stainless steel		13	Rod bushing	Aluminum alloy	Hard alumite
7	Cushion rubber	Urethane rubber					

Dimensions

● SCPD3-D (L) Basic type (00)

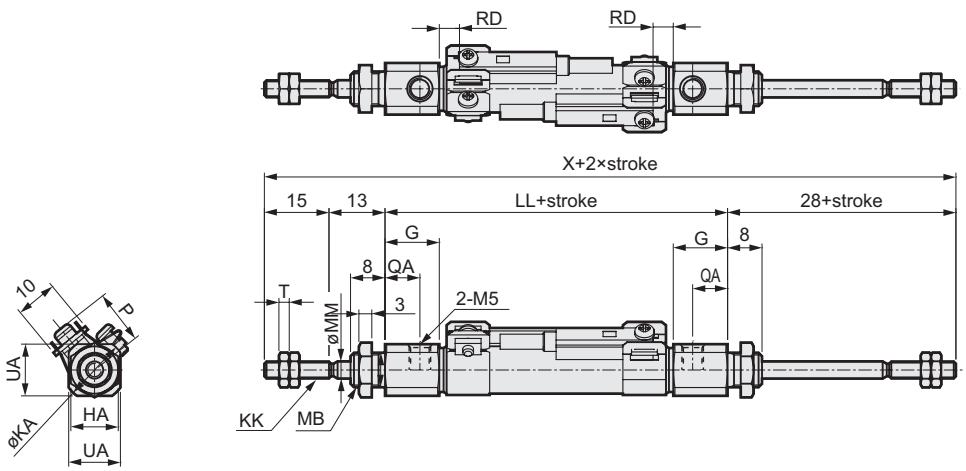

Note 1: The dimensions without switch are same as the ones with switch. (The magnet is not integrated.)
Note 2: The ø6 and ø10 port thread depth is 3.8 mm. When using a fitting, prepare a fitting with a thread length of 3.8 mm or less.
Note 3: Refer to page 51 for accessory dimensions.

Symbol / Bore size (mm)	Basic type (00) basic dimensions												With switch		
	B	G	HA	KA	KK	LL	MB	MM	QA	T	UA	X	T0,T5,T2,T3 RD	T2W,T3W RD	P
ø6	5.5	17	8	13.5	M3	56	M6	3	13	1.8	11	112	2	4	5.5
ø10	7	12.5	11	14.5	M4	54.5	M8×1.0	4	8	2.4	12	110.5	5.5	7.5	12.5
ø16	8	13	14	21.5	M5	55	M10×1.0	5	8.5	3.2	18	111	4	6	15.5

● One side axial foot (LS)

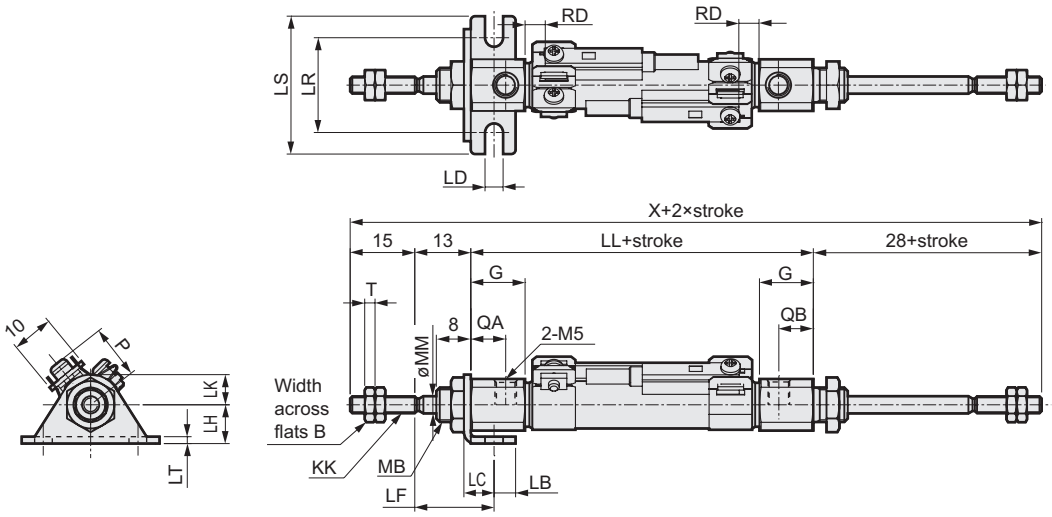

Note 1: The dimensions without switch are same as the ones with switch. (The magnet is not integrated.)
Note 2: The ø6 and ø10 port thread depth is 3.8 mm. When using a fitting, prepare a fitting with a thread length of 3.8 mm or less.
Note 3: Refer to page 51 for accessory dimensions.

Symbol / Bore size (mm)	Basic type (00) basic dimensions									Mounting dimensions									With switch		
	B	G	KK	LL	MB	MM	QA	T	X	LB	LC	LD	LF	LH	LK	LR	LS	LT	T0,T5,T2,T3 RD	T2W,T3W RD	P
ø6	5.5	17	M3	56	M6	3	13	1.8	112	5	7	4.2	18.4	9	7	22	32	1.6	2	4	5.5
ø10	7	12.5	M4	54.5	M8×1.0	4	8	2.4	110.5	5	7	4.2	18.4	9	7	22	32	1.6	5.5	7.5	12.5
ø16	8	13	M5	55	M10×1.0	5	8.5	3.2	111	6	9	5.2	19.7	14	10	29	42	2.3	4.0	6	15.5

Dimensions

● Both sides axial foot (LB)

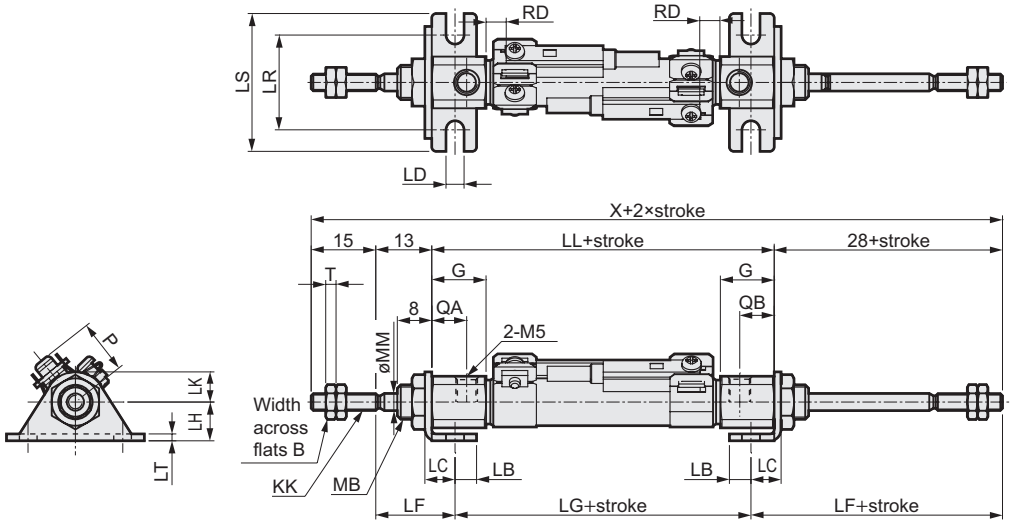

Note 1: The dimensions without switch are same as the ones with switch. (The magnet is not integrated.)
Note 2: The ø6 and ø10 port thread depth is 3.8 mm. When using a fitting, prepare a fitting with a thread length of 3.8 mm or less.
Note 3: Refer to page 51 for accessory dimensions.

Symbol / Bore size (mm)	Both sides axial foot type (LB) basic dimensions									Mounting dimensions										With switch		
	B	G	KK	LL	MB	MM	QA	T	X	LB	LC	LD	LF	LH	LG	LK	LR	LS	LT	T0,T5,T2,T3 RD	T2W,T3W RD	P
ø6	5.5	17	M3	56	M6	3	13	1.8	112	5	7	4.2	18.4	9	45.2	7	22	32	1.6	2	4	5.5
ø10	7	12.5	M4	54.5	M8×1.0	4	8	2.4	110.5	5	7	4.2	18.4	9	43.7	7	22	32	1.6	3.5	5.5	12.5
ø16	8	13	M5	55	M10×1.0	5	8.5	3.5	111	6	9	5.2	19.7	14	41.6	10	29	42	2.3	3.5	5	15.5

● Rod end flange type (FA)

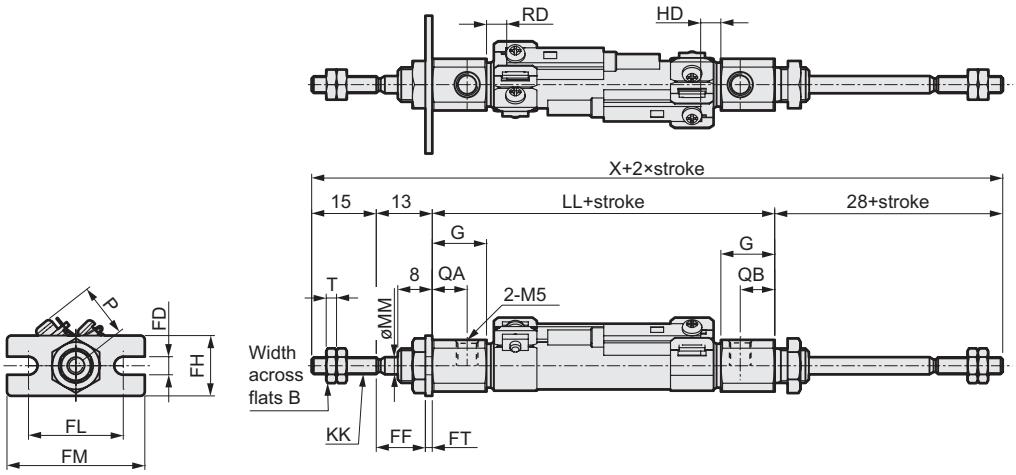

Note 1: The dimensions without switch are same as the ones with switch. (The magnet is not integrated.)
Note 2: The ø6 and ø10 port thread depth is 3.8 mm. When using a fitting, prepare a fitting with a thread length of 3.8 mm or less.
Note 3: Refer to page 51 for accessory dimensions.

Symbol / Bore size (mm)	Rod end flange (FA) basic dimensions									Mounting dimensions						With switch		
	B	G	KK	LL	MB	MM	QA	T	X	FD	FF	FH	FL	FM	FT	T0,T5,T2,T3 RD	T2W,T3W RD	P
ø6	5.5	17	M3	56	M6	3	13	1.8	112	4.2	11.4	14	22	32	1.6	2	4	5.5
ø10	7	12.5	M4	54.5	M8×1.0	4	8	2.4	110.5	4.2	11.4	14	22	32	1.6	3.5	5.5	12.5
ø16	8	13	M5	55	M10×1.0	5	8.5	3.2	111	5.2	10.7	20	29	34	2.3	3.5	5	15.5

Pencil shaped cylinder

Single acting extended non-rotating type **SCPS3-M Series**

Double acting non-rotating type **SCPD3-M Series**

● Bore size: ø10/ø16

JIS symbol

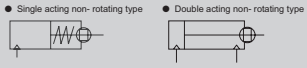

RoHS

Specifications

Descriptions		SCPS3-M SCPS3-ML		SCPD3-M SCPD3-ML	
Bore size	mm	ø10	ø16	ø10	ø16
Actuation		Single acting non-rotating type		Double acting non-rotating type	
Working fluid		Compressed air			
Max. working pressure	MPa	1.0			
Min. working pressure	MPa	0.15		0.1	
Withstanding pressure	MPa	1.6			
Ambient temperature	°C	-10 to 60 (no freezing)			
Port size		M5			
Stroke tolerance	mm	+1.0 0			
Working piston speed	mm/s	50 to 750			
Cushion		Rubber cushion			
Lubrication		Not required (when lubricating, use turbine oil Class 1 ISO VG32.)			
Revolvable angle tolerance (Note)		±2°			
Allowable energy absorption	J	0.042	0.162	0.042	0.162

(Note): Stroke length at 0 o'clock (deflection of piston rod excluded)

Stroke length

Bore size (mm)		Standard stroke length (mm)	Max. stroke length (mm)	Min. stroke length (mm)
SCPS3-M	ø10	15/30/45/60	120	5
	ø16			
SCPD3-M	ø10		200	
	ø16		260	

Note 1: The custom stroke length is available by 1mm increment.

Minimum stroke length with switch

	One		Two	
Schematic	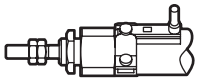 Rod side installation	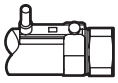 Head side installation	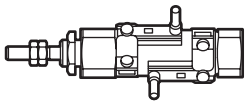 Different surface installation	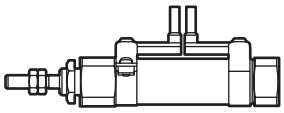 Same surface installation
Min. stroke length	5mm		10mm	28mm

Switch specifications

Descriptions	Proximity 2 wire		Proximity 3 wire	
	T2H/T2V	T2WH/T2WV	T3H/T3V	T3WH/T3WV
Applications	Programmable controller		Programmable controller, relay	
Output method	-		NPN output	
Power voltage	-		10 to 28VDC	
Load voltage	10 to 30VDC	24VDC±10%	30VDC or less	
Load current	5 to 20mA		100mA or less	50mA or less
Light	LED (ON lighting)	Red/green LED (ON lighting)	LED (ON lighting)	Red/green LED (ON lighting)
Leakage current	1mA or less		10 μA or less	
Weight g	1m:18 3m:49 5m:80		1m:18 3m:49 5m:80	

Descriptions	Reed 2 wire			
	T0H/T0V		T5H/T5V	
Applications	Programmable controller, relay		Programmable controller, relay IC circuit (without light), serial connection	
Load voltage	12/24VDC	110VAC	5/12/24VDC	110VAC
Load current	5 to 50mA	7 to 20mA	50mA or less	20mA or less
Light	LED (ON lighting)		Without indicator light	
Leakage current	0mA		0mA	
Weight g	1m:18 3m:49 5m:80		1m:18 3m:49 5m:80	

Single acting spring load (SCPS3-M)

(Unit: g)

Bore size (mm)	0mm stroke	Full stroke length during operation
ø10	3.2	7.5
ø16	6.4	14.9

Cylinder weight

(Unit: g)

Type	Descriptions / Bore size (mm)	Mounting bracket weight: Foot type LS	Mounting bracket weight: Flange type FA	Mounting bracket weight: Clevis type CB	Weight for 0mm stroke	Additional weight per 10mm stroke	Switch weight (per switch)	Bracket weight
SCPS3-M	ø10	6	4	4	20	4	Refer to weight written on switch specifications.	2
	ø16	15	12	10	35	8		
SCPD3-M	ø10	6	4	4	21	2		
	ø16	15	12	10	42	3		

(ex) Product weight of. SCPS3-ML-LS-10-30-T0H-D

- Mounting bracket weight(Foot type) 6g
- Weight for 0mm stroke 20g
- Additional weight per 30mm stroke.....4×30/10=12g
- Switch weight..... 2× (18+2)=40g
- Product weight.....6+20+12+40=78g

How to order

Without switch

SCPD3-M — LS - 10 - 15 - O ———— I

With switch

SCPD3-ML - LS - 10 - 15 - O - T2H - R - I

Ⓐ Model no.

Ⓑ Mounting style

Ⓒ Bore size

Ⓓ Stroke length

Ⓔ Head end port direction Note 3

Ⓕ Switch model no. Note 2 * indicates cable length

Ⓖ Switch quantity

Ⓗ Accessory Note 4

Symbol	Descriptions
Ⓐ Model no.	
SCPS3-M	Single acting extended non-rotating type
SCPD3-M	Double acting non-rotating type

Ⓑ Mounting style	
00	Basic type
LS	One side axial foot type (rod end)
FA	Rod end flange type
CB	Clevis bracket type (pin and snap ring attached)

Ⓒ Bore size (mm)	
10	ø10
16	ø16

Ⓓ Stroke length (mm)

Bore size	Stroke length Note 1	Available stroke length	Custom stroke length
ø10	**5 to 200 (120)**	**210 (120)**	By 1 mm increment
ø16	**5 to 260 (120)**	**270 (120)**	
*Values in ( ) parentheses are for SCPS3-M			

Ⓔ Head end port direction	
Blank	Vertical
O	Axial direction

Ⓕ Switch model no.

Lead wire Axial	L-type lead wire	Connection	Voltage AC	Voltage DC	Indicator	Lead wire
T0H*	**T0V***	Reed	●	●	One color indicator type	2 wire
T5H*	**T5V***	Reed	●	●	Without indicator light	2 wire
T2H*	**T2V***	Proximity		●	One color indicator type	2 wire
T3H*	**T3V***	Proximity		●	One color indicator type	3 wire
T2WH*	**T2WV***	Proximity		●	Two color indicator type	2 wire
T3WH*	**T3WV***	Proximity		●	Two color indicator type	3 wire

*** Lead wire length**	
Blank	1m (standard)
3	3m (option)
5	5m (option)

Ⓖ Switch quantity	
R	One on rod end
H	One on head end
D	Two
T	Three

Ⓗ Accessory	
Mounting style (ø)	
I	Rod eye
Y	Rod clevis (pin and snap ring attached)
B1	Eye bracket
B2	Clevis bracket

⚠ Note on model no. selection

Note 1: Refer to page 41 for min. stroke length with switch.
Note 2: Magnet is not integrated for types without switch.
Note 3: Support type CB cannot be made for port orientation "0" axial.
Note 4: "I" and "Y" cannot be chosen at the same time.
Note 5: Copper and PTFE free as standard.
Note 6: Switches will be attached with cylinders when shipping.

<Example of model number>
SCPS3-ML-LS-10-15-O-T2H-R-I
Model: Pencil shaped cylinder Non-rotating type

Ⓐ Model no.	: Single acting extended non-rotating type
Ⓑ Mounting style	: One side axial foot type (rod end)
Ⓒ Bore size	: ø10mm
Ⓓ Stroke length	: 15mm
Ⓔ Head end port direction	: Axial direction
Ⓕ Switch model no.	: Proximity switch T2H, lead wire 1m
Ⓖ Switch quantity	: One on rod end
Ⓗ Accessory	: Rod eye

How to order switch

● Switch + mounting bracket set

SCPD3 - T0H - 6

Bore size
(previous page, point “C”)

Switch model no.
(previous page, point “F”)

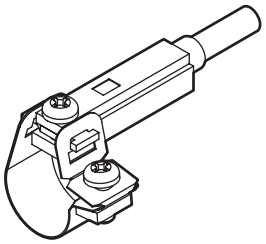

● Switch (with fixing bracket)

SCPD3 - T0H

Switch model no.
(previous page,
point “F”)

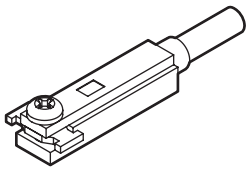

Note) The small cross pan head screw for the fixed bracket differs from the T-type standard switch.

● Mounting bracket set + fixing bracket

SCPD3 - TS - 6

Bore size
(previous page,
point “C”)

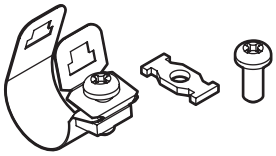

Orders of 20 or more are packaged as a set.

● Mounting bracket set

SCPD3 - T - 6

Bore size
(previous page,
point “C”)

Orders of 20 or more are packaged as a set.

How to order mounting bracket

Bore size (mm) / Mounting bracket	ø10	ø16
Foot (LS)	P2-LS-10M	P2-LS-16M
Flange (FA)	P2-FA-10M	P2-FA-16M

Note: 1pc. / set is applied for a foot (LS) type mounting bracket.

Internal structure and parts list

● Single acting non-rotating type
SCPS3-M
SCPS3-ML (With switch)

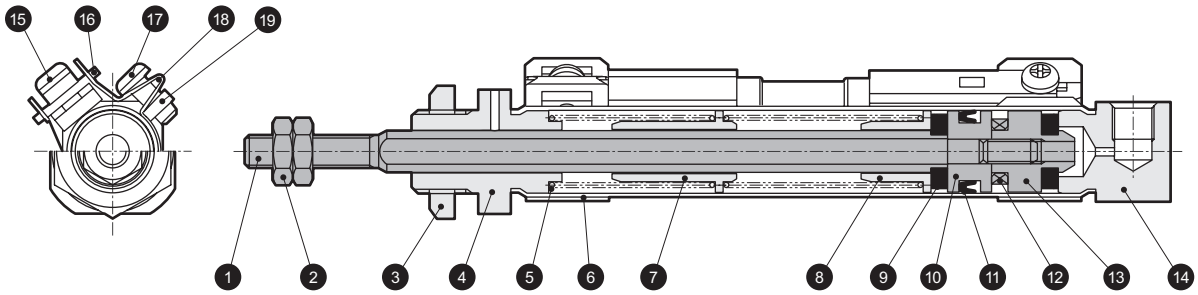

● This product cannot be disassembled.

No.	Part name	Material	Remarks	No.	Part name	Material	Remarks
1	Piston rod	Stainless steel		11	Piston packing seal	Nitrile rubber	
2	Rod nut	Steel	Nickeling	12	Magnet	-	Only with switch
3	Hexagon nut	Steel	Nickeling	13	Spacer	Aluminum alloy	
4	Rod cover	Aluminum alloy	Hard alumite	14	Head cover	Aluminum alloy	Hard alumite
5	Coil spring	Piano wire	Galvanized chromate	15	Small cross pan head thread	Stainless steel	Only with switch
6	Cylinder tube	Stainless steel		16	Bracket	Stainless steel	Only with switch
7	Spring holder (A)	Aluminum alloy		17	Small cross pan head thread	Stainless steel	Only with switch
8	Spring holder (B)	Aluminum alloy		18	Band	Stainless steel	Only with switch
9	Cushion rubber	Urethane rubber		19	Fixing nut	Stainless steel	Only with switch
10	Piston	Aluminum alloy					

Internal structure and parts list

● Double acting non-rotating type
SCPD3-M
SCPD3-ML (With switch)

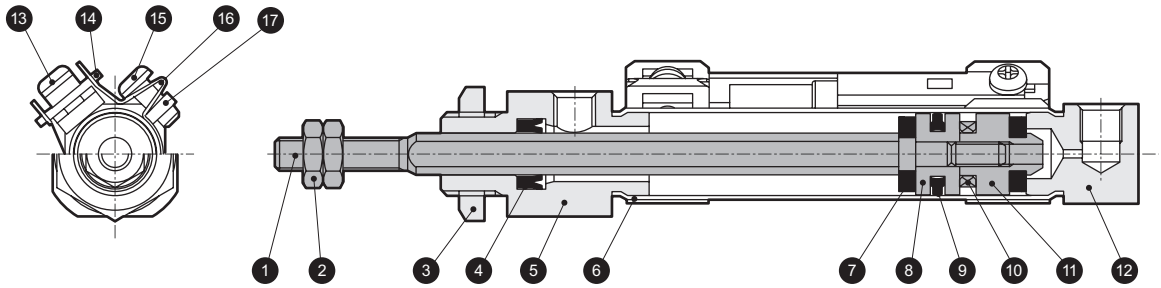

● This product cannot be disassembled.

No.	Part name	Material	Remarks	No.	Part name	Material	Remarks
1	Piston rod	Stainless steel		10	Magnet	-	Only with switch
2	Rod nut	Steel	Nickeling	11	Spacer	Aluminum alloy	
3	Hexagon nut	Steel	Nickeling	12	Head cover	Aluminum alloy	Hard alumite
4	Rod packing seal	Nitrile rubber		13	Small cross pan head thread	Stainless steel	Only with switch
5	Rod cover	Aluminum alloy	Hard alumite	14	Bracket	Stainless steel	Only with switch
6	Cylinder tube	Stainless steel		15	Small cross pan head thread	Stainless steel	Only with switch
7	Cushion rubber	Urethane rubber		16	Band	Stainless steel	Only with switch
8	Piston	Aluminum alloy		17	Fixing nut	Stainless steel	Only with switch
9	Piston packing seal	Nitrile rubber					

Dimensions

● SCPS3-M (L) Basic type (00)

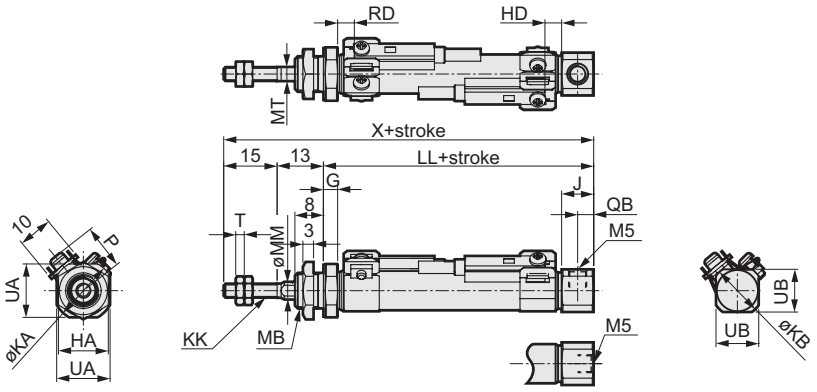

Port direction and axial direction

Note 1: The dimensions without switch are same as the ones with switch. (The magnet is not integrated.)
Note 2: The ø10 port thread depth is 3.8 mm. When using a fitting, prepare a fitting with a thread length of 3.8 mm or less.
Note 3: Refer to page 51 for accessory dimensions.

Symbol / Bore size (mm)	Basic type (00) basic dimensions																								
	B	G	HA	J	KA	KB	KK	LL								MB	MM	MT	QB	T	UA	UB	X		
								15 or less	Over 15 to 30	Over 30 to 45	Over 45 to 60	Over 60 to 75	Over 75 to 90	Over 90 to 105	Over 105 to 120								15 or less	Over 15 to 30	Over 30 to 45
ø10	7	4	14	9	17	14.5	M4	47	52	62	67	77	82	92	97	M10×1.0	5	4	4.5	2.4	15	12	75	80	90
ø16	8	4	17	9	21.5	21.5	M5	47	52	62	67	77	82	92	97	M12×1.0	6	5	4.5	3.2	18	18	75	80	90

Symbol / Bore size (mm)							With switch																			
	X					Y	T0,T5,T2,T3										T2W,T3W									P
							RD								HD	RD								HD		
	Over 45 to 60	Over 60 to 75	Over 75 to 90	Over 90 to 105	Over 105 to 120		15 or less	Over 15 to 30	Over 30 to 45	Over 45 to 60	Over 60 to 75	Over 75 to 90	Over 90 to 105	Over 105 to 120		15 or less	Over 15 to 30	Over 30 to 45	Over 45 to 60	Over 60 to 75	Over 75 to 90	Over 90 to 105	Over 105 to 120			
ø10	95	105	110	120	125	3	13.5	18.5	28.5	33.5	43.5	48.5	58.5	63.5	2.5	15	20	30	35	45	50	60	65	4	12.5	
ø16	95	105	110	120	125	3	11.5	16.5	26.5	31.5	41.5	46.5	56.5	61.5	3.5	13.5	18.5	28.5	33.5	43.5	48.5	58.5	63	3.5	15.5	

● One side axial foot (LS)

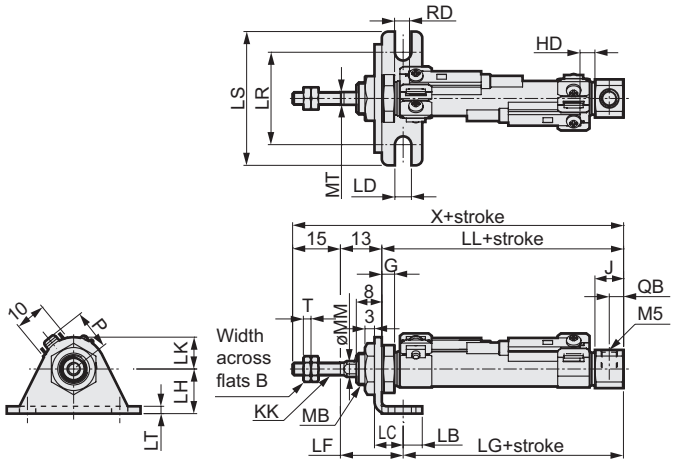

Note 1: The dimensions without switch are same as the ones with switch. (The magnet is not integrated.)
Note 2: The ø10 port thread depth is 3.8 mm. When using a fitting, prepare a fitting with a thread length of 3.8 mm or less.
Note 3: Refer to page 51 for accessory dimensions.

Symbol / Bore size (mm)	One side axial (LS) basic dimensions																				Mounting dimensions							
	B	G	J	KB	KK	MB	MM	MT	QB	T	UB	X									LB	LC	LD	LF	LG			
												15 or less	Over 15 to 30	Over 30 to 45	Over 45 to 60	Over 60 to 75	Over 75 to 90	Over 90 to 105	Over 105 to 120						15 or less	Over 15 to 30	Over 30 to 45	Over 45 to 60
ø10	7	4	9	14.5	M4	M10×1.0	5	4	4.5	2.4	12	75	80	90	95	105	110	120	125		6	9	5.2	19.7	41.9	46.9	56.9	61.9
ø16	8	4	9	21.5	M5	M12×1.0	6	5	4.5	3.2	18	75	80	90	95	105	110	120	125		6	9	5.2	19.7	40.1	45.1	55.1	60.1

Symbol / Bore size (mm)									With switch																			
	LG				LH	LK	LR	LS	LT	T0,T5,T2,T3										T2W,T3W								P
										RD								HD		RD							HD	
	Over 60 to 75	Over 75 to 90	Over 90 to 105	Over 105 to 120						15 or less	Over 15 to 30	Over 30 to 45	Over 45 to 60	Over 60 to 75	Over 75 to 90	Over 90 to 105	Over 105 to 120			15 or less	Over 15 to 30	Over 30 to 45	Over 45 to 60	Over 60 to 75	Over 75 to 90	Over 90 to 105	Over 105 to 120		
ø10	71.9	76.9	86.9	91.9	14	10	29	42	2.3	13.5	18.5	28.5	33.5	43.5	48.5	58.5	63.5	2.5		15	20	30	35	45	50	60	65	4	12.5
ø16	70.1	75.1	85.1	90.1	14	10	29	42	2.3	11.5	16.5	26.5	31.5	41.5	46.5	56.5	61.5	3.5		13.5	18.5	28.5	33.5	43.5	48.5	58.5	63	3.5	15.5

Dimensions

● Rod end flange type (FA)

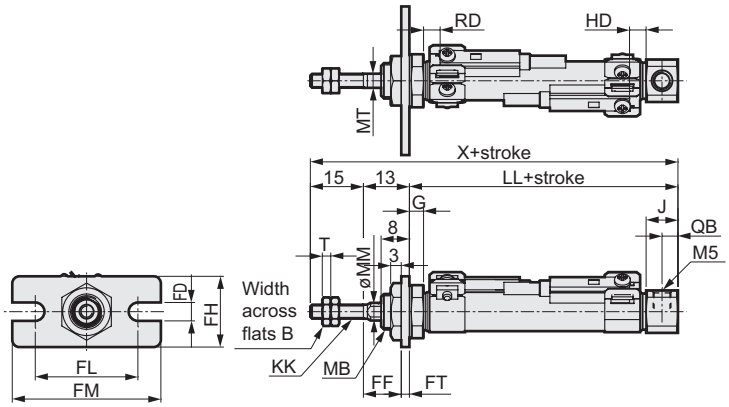

Note 1: The dimensions without switch are same as the ones with switch. (The magnet is not integrated.)
Note 2: The ø10 port thread depth is 3.8 mm. When using a fitting, prepare a fitting with a thread length of 3.8 mm or less.
Note 3: Refer to page 51 for accessory dimensions.

Symbol / Bore size (mm)	Rod end flange (FA) basic dimensions																								
	B	D	G	J	KB	KK	LL								MB	MM	MT	QB	T	UB	X					
							15 or less	Over 15 to 30	Over 30 to 45	Over 45 to 60	Over 60 to 75	Over 75 to 90	Over 90 to 105	Over 105 to 120							15 or less	Over 15 to 30	Over 30 to 45	Over 45 to 60	Over 60 to 75	Over 75 to 90
ø10	7	11	4	9	14.5	M4	47	52	62	67	77	82	92	97	M10×1.0	5	4	4.5	2.4	12	75	80	90	95	105	110
ø16	8	17.4	4	9	21.5	M5	47	52	62	67	77	82	92	97	M12×1.0	6	5	4.5	3.2	18	75	80	90	95	105	110

Symbol / Bore size (mm)	Mounting dimensions							With switch																			
	X		FD	FF	FH	FL	FM	FT	T0,T5,T2,T3									T2W,T3W									P
									RD								HD	RD								HD	
	Over 90 to 105	Over 105 to 120							15 or less	Over 15 to 30	Over 30 to 45	Over 45 to 60	Over 60 to 75	Over 75 to 90	Over 90 to 105	Over 105 to 120		15 or less	Over 15 to 30	Over 30 to 45	Over 45 to 60	Over 60 to 75	Over 75 to 90	Over 90 to 105	Over 105 to 120		
ø10	120	125	5.2	10.7	20	29	42	2.3	13.5	18.5	28.5	33.5	43.5	48.5	58.5	63.5	2.5	15	20	30	35	45	50	60	65	4	12.5
ø16	120	125	5.2	10.7	20	29	42	2.3	11.5	16.5	26.5	31.5	41.5	46.5	56.5	61.5	3.5	13.5	18.5	28.5	33.5	43.5	48.5	58.5	63	3.5	15.5

● Clevis bracket type (CB) with pin

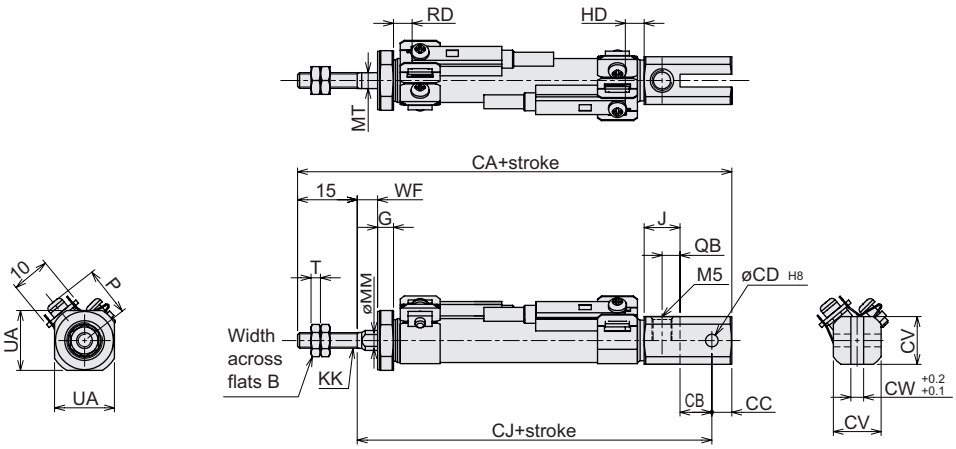

Note 1: The dimensions without switch are same as the ones with switch. (The magnet is not integrated.)
Note 2: The ø10 port thread depth is 3.8 mm. When using a fitting, prepare a fitting with a thread length of 3.8 mm or less.
Note 3: Refer to page 51 for accessory dimensions.

Symbol / Bore size (mm)	Clevis bracket type (CB) basic dimensions										Mounting dimensions																	
	B	D	G	J	KK	MM	MT	QB	T	UA	CA								CB	CC	CD	CJ						
											15 or less	Over 15 to 30	Over 30 to 45	Over 45 to 60	Over 60 to 75	Over 75 to 90	Over 90 to 105	Over 105 to 120				15 or less	Over 15 to 30	Over 30 to 45	Over 45 to 60	Over 60 to 75	Over 75 to 90	Over 90 to 105	Over 105 to 120
ø10	7	11	4	9	M4	5	4	4.5	2.4	15	80	92	104	116	128	140	152	164	8	5	3.2	60	72	84	96	108	120	132	144
ø16	8	17.4	4	9	M5	6	5	4.5	3.2	18	87	99	111	123	135	147	159	171	10	10	5	62	74	86	98	110	122	134	146

Symbol / Bore size (mm)											With switch																			
	CV	CW	WF								T0,T5,T2,T3											T2W,T3W								P
											RD								HD	RD								HD	
			15 or less	Over 15 to 30	Over 30 to 45	Over 45 to 60	Over 60 to 75	Over 75 to 90	Over 90 to 105	Over 105 to 120	15 or less	Over 15 to 30	Over 30 to 45	Over 45 to 60	Over 60 to 75	Over 75 to 90	Over 90 to 105	Over 105 to 120		15 or less	Over 15 to 30	Over 30 to 45	Over 45 to 60	Over 60 to 75	Over 75 to 90	Over 90 to 105	Over 105 to 120		
ø10	12	3.2	5	12	14	21	23	30	32	39	13.5	18.5	28.5	33.5	43.5	48.5	58.5	63.5	2.5	15	20	30	35	45	50	60	65	4	12.5
ø16	18	6.5	5	12	14	21	23	30	32	39	11.5	16.5	26.5	31.5	41.5	46.5	56.5	61.5	3.5	13.5	18.5	28.5	33.5	43.5	48.5	58.5	63	3.5	15.5

Dimensions

● SCPD3-M (L) Basic type (00)

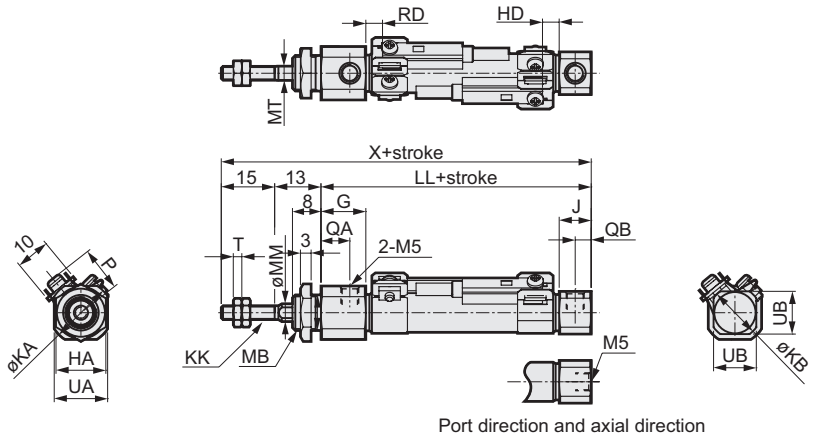

Note 1: Refer to page 51 for accessory dimensions.

Symbol	Basic type (00) basic dimensions													
Bore size (mm)	B	HA	G	J	KA	KB	KK	LL	MB	MM	MT	QA	QB	T
ø10	7	14	12.5	9	17	14.5	M4	46	M10×1.0	5	4	8	4.5	2.4
ø16	8	17	13.0	9	21.5	21.5	M5	46	M12×1.0	6	5	8.5	4.5	3.2

Symbol				With switch					
Bore size (mm)	UA	UB	X	T0,T5,T2,T3		T2W,T3W		P	
				RD	HD	RD	HD		
ø10	15	12	74	3.5	2.5	5.5	4	12.5	
ø16	18	18	74	3.5	2	5	3.5	15.5	

● One side axial foot (LS)

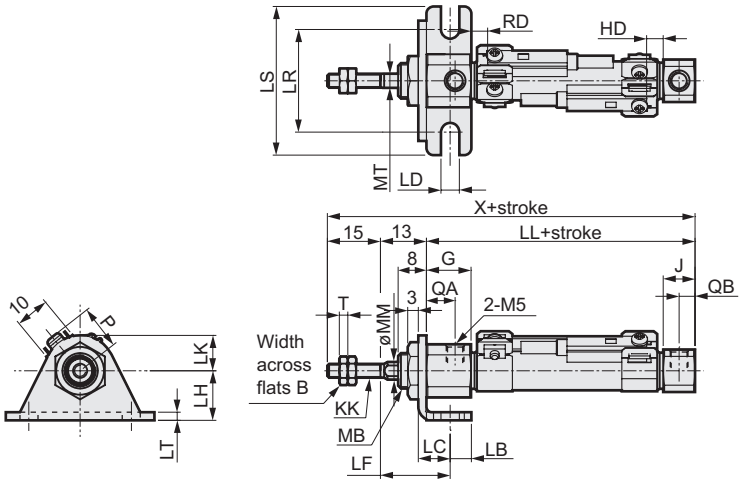

Note 1: Refer to page 51 for accessory dimensions.

Symbol	One side axial foot (LS) basic dimensions												Mounting dimensions		
Bore size (mm)	B	G	J	KK	MB	MM	MT	QA	QB	T	UB	X	LD	LH	LB
ø10	7	12.5	9	M4	M10×1.0	5	4	8	4.5	2.4	12	74	5.2	14	6
ø16	8	13.0	9	M5	M12×1.0	6	5	8.5	4.5	3.2	18	74	5.2	14	6

Symbol								With switch					
Bore size (mm)	LT	LC	LK	LR	LS	LF	LL	T0,T5,T2,T3		T2W,T3W		P	
								RD	HD	RD	HD		
ø10	2.3	9	10	29	42	19.7	46	3.5	2.5	5.5	4	12.5	
ø16	2.3	9	10	29	42	19.7	46	3.5	2	5	3.5	15.5	

Dimensions

● Rod end flange type (FA)

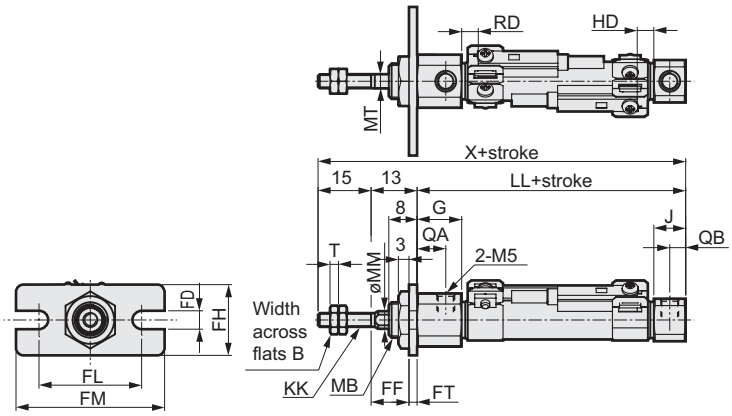

Note 1: Refer to page 51 for accessory dimensions.

Symbol	Rod flange type (FA) basic dimensions													
Bore size (mm)	B	G	J	KB	KK	LL	MB	MM	MT	QA	QB	T	UB	X
ø10	7	12.5	9	14.5	M4	46	M10×1.0	5	4	8.0	4.5	2.4	12	74
ø16	8	13.0	9	21.5	M5	46	M12×1.0	6	5	8.5	4.5	3.2	18	74

Symbol	Mounting dimensions						With switch					
Bore size (mm)	FH	FD	FT	FL	FM	FF	T0,T5,T2,T3		T2W,T3W		P	
							RD	HD	RD	HD		
ø10	20	5.2	2.3	29	42	10.7	3.5	2.5	5.5	4	12.5	
ø16	20	5.2	2.3	29	42	10.7	3.5	2	5	3.5	15.5	

● Clevis bracket type (CB) with pin

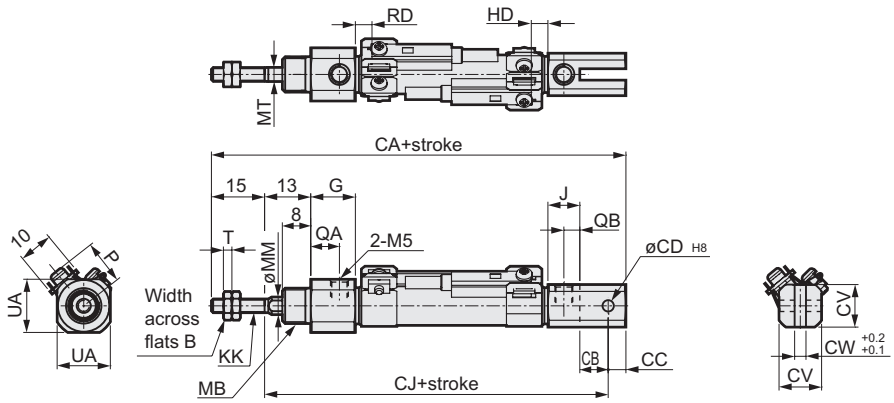

Note 1: Refer to page 51 for accessory dimensions.

Symbol	Clevis bracket type (CB) basic dimensions												Mounting dimensions	
Bore size (mm)	B	G	J	KK	MM	MB	MT	QA	QB	T	UA	CV	CW	CD
ø10	7	12.5	9	M4	5	M10×1.0	4	8	4.5	2.4	15	12	3.2	3.2
ø16	8	13.0	9	M5	6	M12×1.0	5	8.5	4.5	3.2	18	18	6.5	5

Symbol					With switch					
Bore size (mm)	CB	CC	CJ	CA	T0,T5,T2,T3		T2W,T3W		P	
					RD	HD	RD	HD		
ø10	8	5	67	87	3.5	2.5	5.5	4	12.5	
ø16	10	10	69	94	3.5	2	5	3.5	15.5	

Common accessory dimensions

Dimensions

● Rod eye (I) Material: Steel

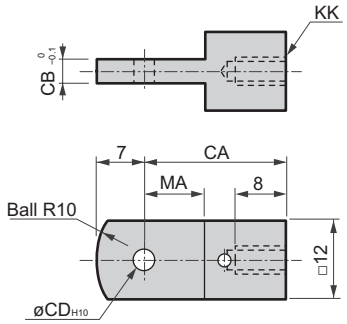

Model no.	Applicable tube bore (mm)	CA	CB	CD	KK	MA	Weight (g)
P2-I-10	ø10	21	3.1	3.2	M4	9	17
P2-I-16	ø16	25	6.4	5	M5	14	21

● Rod eye (Y) Material: Steel

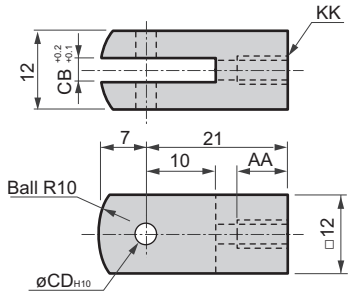

Note: Pin and snap ring are attached.

Model no.	AA	CB	CD	KK	Weight (g)
P2-Y-10	8	3.2	3.2	M4	25
P2-Y-16	10	6.5	5	M5	20

● Rod clevis
Pin for bracket (P)
Clevis Material: Stainless steel

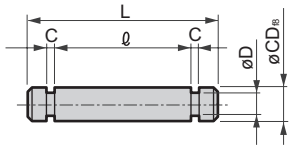

Note: The pin and fastener for use with the rod clevis is attached with the product.

Model no.	Applicable tube bore (mm)	Applicable	C	D	CD	ℓ	L	Weight (g)
P2-P-10	10	Rod clevis/ Bracket/Clevis	0.6	2.5	3.2	13	17	1.2
P2-P-10Z		Clevis for Z				16	20	1.4
P2-P-16	16	Rod clevis/Bracket	0.7	4	5	13	18	3.0
P2-P-16A		Clevis	0.7	4	5	19	24	3.9

● Clevis Bracket (B2) Material: Steel

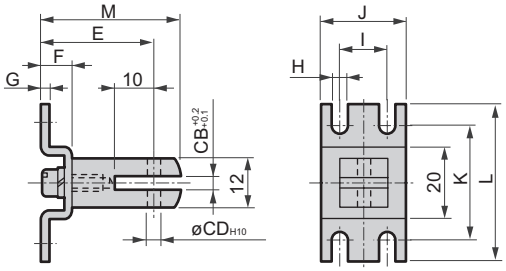

Note: Pin and snap ring are attached.

Model no.	Applicable tube bore (mm)	CD	E	CB	F	G	H	I	J	K	L	M	Weight (g)
P2-B2-10	ø10	3.2	29	3.2	8	2	4.2	12	22	30.2	40	36	44
P2-B2-16	ø16	5	31	6.5	10	2.3	5.2	16	28	35.2	48	38	44

● Eye bracket (B1) Material: Steel

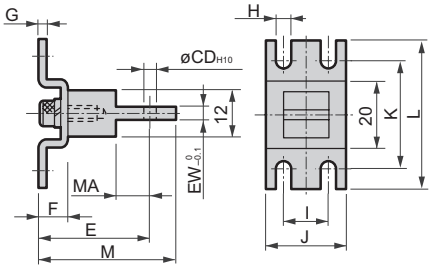

Model no.	Applicable tube bore (mm)	CD	E	EW	F	G	H	I	J	K	L	M	MA	Weight (g)
P2-B1-10	ø10	3.2	29	3.1	8	2	4.2	12	22	30.2	40	36	9	37
P2-B1-16	ø16	5	35	6.4	10	2.3	5.2	16	28	35.2	48	42	14	48

● Hose nipples for pencil shaped cylinders (Sales unit 1 bag/10 pieces)

● Barbed fitting

Straight/FCS

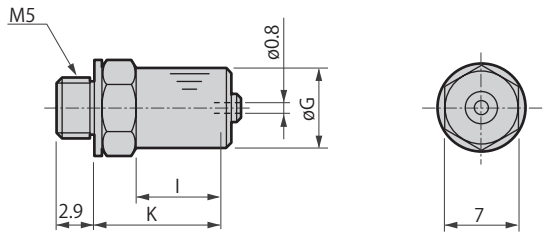

Model no.	Applicable tube bore (mm)	G	I	K	Weight (g)	Effective sectional area (mm²)
FCS4-M5P	ø4	7	4.3	11.7	3.2	0.35
FCS6-M5P	ø6	9	5	12.4	4.5	0.35

Elbow/FCL

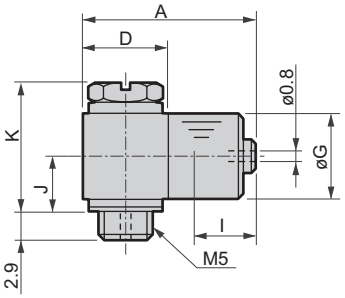

Model no.	Applicable tube bore (mm)	A	D	G	I	J	K	Weight (g)	Effective sectional area (mm²)
FCL4-M5P	ø4	16.1	8	7	4.3	5.1	11.6	6.8	0.35
FCL6-M5P	ø6	17.8	9	9	5	6.1	13.6	10.1	0.35

Safety precautions

Always read this section before starting use.

When designing and manufacturing a device using CKD products, the manufacturer is obligated to check that device safety mechanism, pneumatic control circuit, or water control circuit and the system operated by electrical control that controls the devices is secured.
It is important to select, use, handle, and maintain the product appropriately to ensure that the CKD product is used safely.
Observe warnings and precautions to ensure device safety.
Check that device safety is ensured, and manufacture a safe device.

WARNING

1 This product is designed and manufactured as a general industrial machine part.
It must be handled by an operator having sufficient knowledge and experience in handling.

2 Use this product in accordance of specifications.

This product must be used within its stated specifications. It must not be modified or machined.
This product is intended for use as a general-purpose industrial device or part. It is not intended for use outdoors or for use under the following conditions or environment.
(Note that this product can be used when CKD is consulted prior to use and the customer consents to CKD product specifications. The customer must provide safety measures to avoid risks in the event of problems.)

❶Use for special applications including nuclear energy, railway, aircraft, marine vessel, vehicle, medicinal devices, devices or applications coming into contact with beverages or foodstuffs, amusement devices, emergency cutoff circuits, press machines, brake circuits, or safety devices or applications.
❷Use for applications where life or assets could be adversely affected, and special safety measures are required.

3 Observe corporate standards and regulations, etc., related to the safety of device design and control, etc.

ISO4414, JIS B 8370 (pneumatic system rules)
JFPS2008 (principles for pneumatic cylinder selection and use)
Including High Pressure Gas Maintenance Law, Occupational Safety and Sanitation Laws, other safety rules, body standards and regulations, etc.

4 Do not handle, pipe, or remove devices before confirming safety.

❶Inspect and service the machine and devices after confirming safety of the entire system related to this product.
❷Note that there may be hot or charged sections even after operation is stopped.
❸When inspecting or servicing the device, turn off the energy source (air supply or water supply), and turn off power to the facility. Discharge any compressed air from the system, and pay enough attention to possible water leakage and leakage of electricity.
❹When starting or restarting a machine or device that incorporates pneumatic components, make sure that the system safety, such as pop-out prevention measures, is secured.

5 Observe warnings and cautions on the pages below to prevent accidents.

■ The precautions are ranked as "DANGER", "WARNING" and "CAUTION" in this section.

DANGER: When a dangerous situation may occur if handling is mistaken leading to fatal or serious injuries, or when there is a high degree of emergency to a warning.

WARNING: When a dangerous situation may occur if handling is mistaken leading to fatal or serious injuries.

CAUTION: When a dangerous situation may occur if handling is mistaken leading to minor injuries or physical damage.

Note that some items described as "CAUTION" may lead to serious results depending on the situation.
In any case, important information that must be observed is explained.

Limited Warranty and Disclaimer

1 "Warranty Period" is one (1) year from the first delivery to the customer.

2 In case any defect attributable to CKD is found during Warranty Period, CKD shall, at its own discretion, repair the defect or replace the relevant product in whole or in part, according to its own judgment. In no event CKD shall never be liable for the costs in relation to and the damages resulting from the (de)installation of the product.

This Limited Warranty will not apply to:
(1) Product abuse/misuse contrary to conditions/environment recommended in its catalogs/specifications.
(2) Failure due to other causes.
(3) Use other than original design purposes.
(4) Third-party repair/modification.
(5) Failure due to causes not foreseeable with technology at the time of delivery.
(6) Failure attributable to force majeure.

3 IN NO EVENT SHALL CKD BE LIABLE FOR BUSINESS INTERRUPTIONS, LOSS OF PROFITS, PERSONAL INJURY, COSTS OF DELAY OR FOR ANY OTHER SPECIAL, INDIRECT, INCIDENTAL OR CONSEQUENTIAL LOSSES, COSTS OR DAMAGES.

4 IN NO EVENT SHALL CKD BE LIABLE FOR MERCHANTABILITY OR FITNESS FOR A PARTICULAR PURPOSE, notwithstanding any disclosure to CKD of the use to which the product is to be put.

Safety precautions

Always read this section before starting use.
For general details on cylinders, please consult Pneumatic Cylinders Catalog I

Design & selection

1. Rubber cushioned SCPD3-*C

CAUTION

■ Due to the structure, the stroke limit position cannot be maintained if the air supply is cut off. When detecting stroke ends via switch, it is possible that they are outside the detectable range, so always set the switch position while in an air pressurized state.

(Note2) When vertical installation, a meter-in circuit results in falling by its self-weight. So, provide a meter-out circuit.

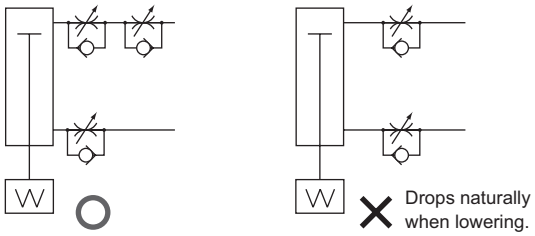

(Note3) For serial connection of speed control valve, provide a circuit as the following diagram.

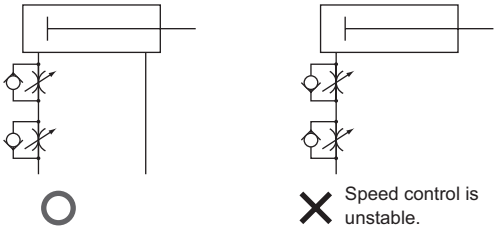

(Cause for popping out symptom)

- Reduce the flow rate to reach a fine speed at the exhaust side in a mater-out circuit. This results in the same pressure level on the both sides immediately after valve switched. The thrust caused by the differential of pressurized area of piston is applied to the PUSH direction and a popping-out of piston rod occurs.

(Reference for popping out occurrence)

- Occurs when [piston rod area] x [air pressure] > [load resistance]

■ Do note apply lateral load.
Install so the sliding guide is not twisted.

- The presence of load or resistance variation may result in unstable operations.
- Large differential between static friction and dynamic friction of guide results in unstable operation.

■ Avoid use with vibration.

- The product will be adversely affected by vibration and operation will be unstable.

2. Fine speed type SCPD3-F

CAUTION

■ Use oil-free.

- Lubrication may change characteristics.

■ Install a speed control valve close to a cylinder.

- If this is installed away from a cylinder, adjustment will be unstable.
- SC-M3/M5-F, SC3W, SCD-M3/M5-F Series speed control valves are recommended.

■ Generally, the higher air pressure, and the smaller load result in the more stable operation.

- Use load factor with 50% or less.

■ Stable speed control is achieved with a meter-out circuit.

- When driving the single rod cylinder at fine speed with the operation direction set to PUSH, popping-out may occur if operation is started when load resistance is small. As a corrective action, use circuit ⓑ, ⓒ or ⓓ. Circuit ⓓ is the most stable.

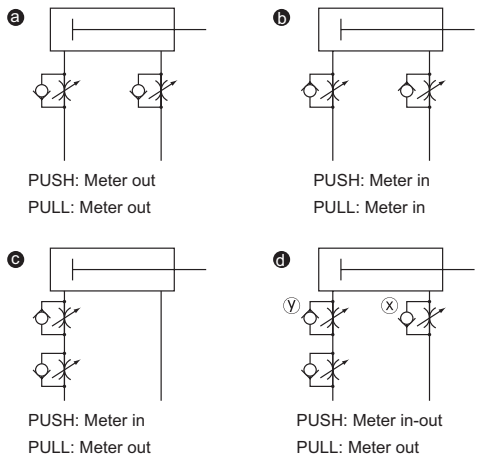

ⓓHow to adjust the push operation speed on circuit d:
1.Set the speed with the x speed control valve.
2. Lower the flow rate with the y speed control valve until popping out no longer occurs.
3. Reconfirmation of speed

(Note 1) Comparing ⓑ, ⓒ , and ⓓ, circuit ⓓ has the most stable operation.

Installation and adjustment

1. Common

⚠ CAUTION

■ Install T-type switches according to the diagram below.

When using standard T type switch (SW-T*)

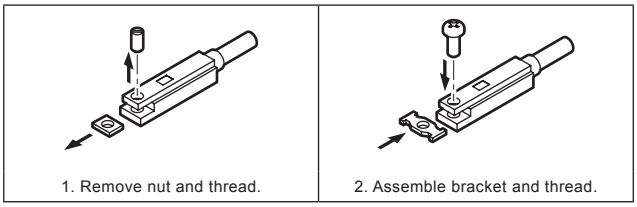

1. Insert the band's socket into the bracket and mount to cylinder

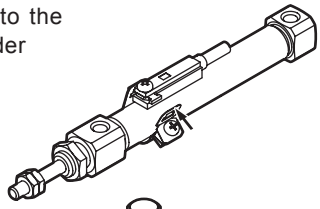

If mounting is difficult, follow these steps.
(1) Tighten thread on switch side.
(2) Insert the band's socket into the bracket.

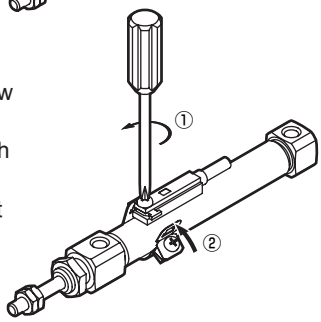

2. Tighten thread on switch side.
Tightening torque: 0.1 to 0.15N·m

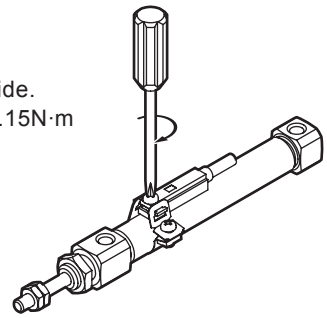

3. Tighten thread on band side.
Tightening torque: 0.1 to 0.15N·m

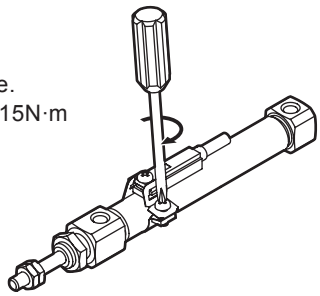

4. When adjusting the switch's installation position
Loosen the thread on the switch's side and adjust to the optimal position, then tighten to stabilize.
Tightening torque: 0.1 to 0.15N·m

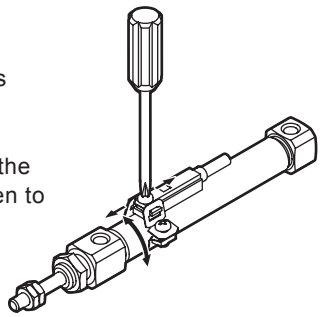

■ If cylinders with switches are installed adjacently in parallel, the cylinder switch could malfunction. Separate cylinders by the distances shown in Table 1.

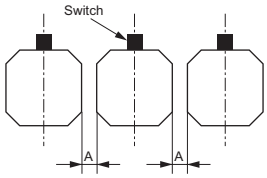

Talbe 1: A dimensions (mm)

Port size \ Switch	T0/T5 Reed	T2/T3 Proximity
ø6	0 and over * 1	3 and over
ø10	0 and over	3 and over
ø16	0 and over	3 and over

* 1 For an SCPS-6 with axial-type ports, please separate by at least 3mm.

■ If cylinders with switches are installed adjacently in parallel, the cylinder switch could malfunction. Separate cylinders by the distances shown in Table 2.

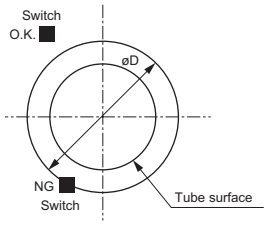

Talbe 2: D dimension (mm)

Port size \ Switch	T0/T5 Reed	T2/T3 proximity
ø6	ø16.5 or more	ø22.5 and over
ø10	ø21 and over	ø26.5 and over
ø16	ø34 and over	ø35 and over

■ Do not pipe forciblu so lateral force is not applied onto cylinder tube.
The cylinder tube can tilt, causing a malfunction.

■ Use hose nipple (with fixed aperture) or speed control valve when piping.
Refer to page 51 for hose nipple.

■ Do not turn the cover
- If the cover is turned when the cylinder is installed and the pipe joint is screwed into the port, the cover engagement section may be damaged.

■ When fixing a workpiece on the end of the piston rod, check that tightening torque is not applied to the cylinder.

■ Tighten the hexagon nut (Part No. (3) in internal structure and parts list on page 5) within the following tightening torque range.
ø 6: 1.46N·m±10%
ø10: 4.09N·m±10%
ø16: 8.78N·m±10%

2. Single acting SCPS3/SCPH3

⚠ CAUTION

- When using the extending single acting cylinder, check that load is not applied when the piston rod is retracted. When using the retracting type, check that load is not applied when the piston rod is extended.
  Spring in the cylinder has minimum force to return the piston rod, and the piston rod will not return to the stroke limit if load is applied.

- Bleed holes on the cover for the single acting type must not be blocked when installed.
  Otherwise, malfunctioning may occur.

- Do not leave the single acting cylinder in a pressurized state.
  If left in the pressurized state, the piston rod may not return with spring force when pressure is released.

3. Fine speed type SCPD3-F

⚠ CAUTION

- Adjust the alignment, etc., so lateral load is not applied to the cylinder.
  Adjust so that the cylinder does not twist in relation to the sliding guide.
  - The presence of load or resistance variation may result in unstable operations.
  - Large differential between static friction and dynamic friction of guide results in unstable operation.

4. Non-rotating type SCPS3-M/SCPD3-M

⚠ CAUTION

- When using the non-rotating type, check that rotation torque is not applied to the piston rod.
  The bushing may warp and life-cycle may be reduced.

- The orientation of the width across flats on the piston rod is manufactured to be parallel to the rod cover, however the degree of precision is not guaranteed.

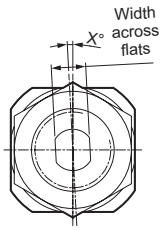

During use and maintenance

1. Common

⚠ CAUTION

- This cylinder cannot be disassembled, so do not apply excessive force to the end cover or tube.

2. Rubber cushioned SCPD3-* C

⚠ CAUTION

- If left standing for a long time, the stroke may be slightly shorter than the reference when used at low pressure settings because of changes in cushion elasticity. Conduct test runs by operating several times or by reciprocating at high supply pressure.

MEMO

WORLD-NETWORK

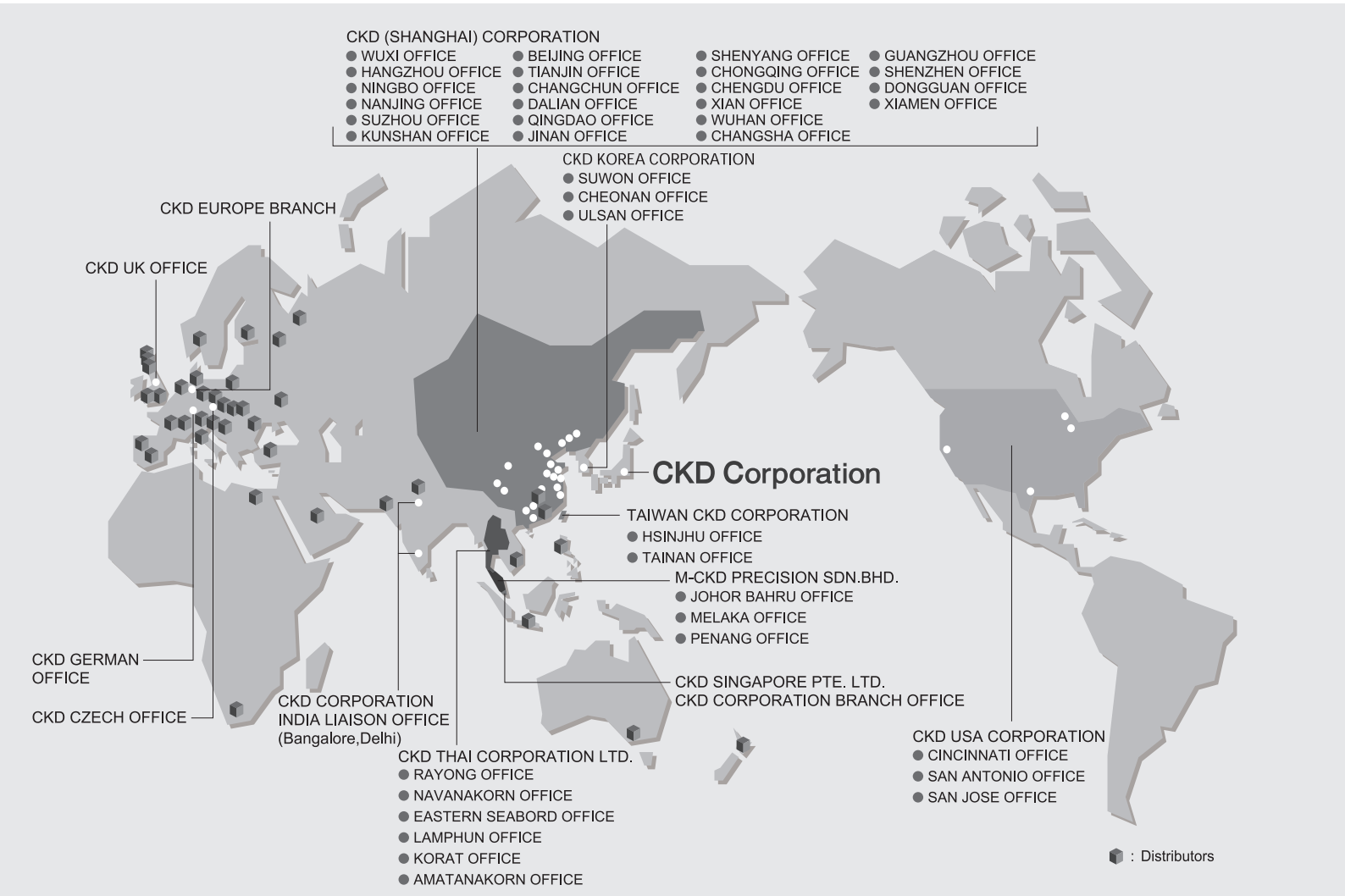

CKD Corporation

Website http://www.ckd.co.jp/

□ OVERSEAS SALES ADMINISTRATION DPT.
SALES AND MARKETING DIV. 2-250 Ouji Komaki, Aichi 485-8551, Japan
□ PHONE +81- (0) 568-74-1338 FAX +81- (0) 568-77-3461

U.S.A.
CKD USA CORPORATION
● HEADQUARTERS
4080 Winnetka Avenue, Rolling Meadows, IL 60008 USA
PHONE +1-847-368-0539 FAX +1-847-788-0575

EUROPE
CKD EUROPE BRANCH
De Fruittuinen 28 Hoofddorp 2132NZ The Netherlands
PHONE +31-(0) 23-5541490 FAX +31-(0) 23-5541491

Malaysia
M-CKD PRECISION SDN.BHD.
● HEADQUARTERS
Lot No.6,Jalan Modal 23/2, Seksyen 23, Kawasan, MIEL,
Fasa 8, 40300 Shah Alam,Selangor Darul Ehsan, Malaysia
PHONE +60-(0) 3-5541-1468 FAX +60-(0) 3-5541-1533

Thailand
CKD THAI CORPORATION LTD.
● SALES HEADQUARTERS-BANGKOK OFFICE
Suwan Tower, 14/1 Soi Saladaeng 1, North Sathorn Rd., Bangrak,
Bangkok 10500 Thailand
PHONE +66-(0) 2-267-6300 FAX +66-(0) 2-267-6305

Singapore
CKD SINGAPORE PTE. LTD.
No.33 Tannery Lane #04-01 Hoesteel Industrial Building Singapore 347789
PHONE +65-67442623 FAX +65-67442486
CKD CORPORATION BRANCH OFFICE
No.33 Tannery Lane #04-01 Hoesteel Industrial Building Singapore 347789
PHONE +65-67447260 FAX +65-68421022

Taiwan
TAIWAN CKD CORPORATION
16F-3,No.109,Sec.1Jhongshan RD.,Shinjhuang Dist., New Taipei City,
24250,Taiwan(R.O.C)
PHONE +886-(0) 2-8522-8198 FAX +886-(0) 2-8522-8128

China
CKD (SHANGHAI) CORPORATION
● SALES HEADQUARTERS / SHANGHAI OFFICE
Room 601,Yuan Zhong Scientific Reseach Building,
1905 Hongmei Road,Shanghai, 200233, China
PHONE +86-(0) 21-61911888 FAX +86-(0) 21-60905356

Korea
CKD KOREA CORPORATION
● HEADQUARTERS
3rd FL, Sam Young B/D, 371-20
Sinsu-Dong, Mapo-Gu, Seoul, 121-110, Korea
PHONE +82-(0) 2-783-5201~5203 FAX +82-(0) 2-783-5204

The goods and their replicas, or the technology and software in this catalog are subject to complementary export regulations by Foreign Exchange and Foreign Trade Law of Japan.
If the goods and their replicas, or the technology and software in this catalog are to be exported, laws require the exporter to make sure they will never be used for the development or the manufacture of weapons for mass destruction.

● Specifications are subject to change without notice.

2012.11