Hand (parallel hand)

* Refer to pages 258 to 259 for the wide angle centering hand.

Range of gripping power at supply pressure 0.5MPa and general jaw length

(Note) Grip applies to one jaw.
The actual value is grip x 2.

	Variation	Model no.	Action of jaw (J)	Gripping power (N) 5 – 10 – 50	Gripping power (N) 50 – 100 – 500 – 1000 – 2000	Switch model no.	Page
Parallel hand	Feather hand (Mini-parallel hand)	FH100		110 (8) 112 (11) 116 (14) 120 (18) 125 (20)		T2H/V T2H/V	264
Parallel hand	Parallel hand	HAP		1C (8) 2CS (16) 3CS (26) 4CS (41)		T2H/V T3H/V	270
Parallel hand	Miniature cross roller parallel hand	BSA2		006C (4)		F2H/V F2H/V	278
Parallel hand	Compact cross roller parallel hand	BHA/BHG		01CS1 (5) 03CS1 (9) 04CS1 (11)	05CS1 (15)	T2H/V T3H/V	282 288
Parallel hand	Linear guide hand	LHA		006CS (4) 01CS (5)	03CS (9) 04CS (11) 05CS (15) 06CS (20)	F2H/V, F3H/V T2H/V, T3H/V	294
Parallel hand	Linear guide hand with rubber cover	LHAG		01CS (5)	03CS (9) 04CS (11) 05CS (15) 06CS (20)	T2H/V T3H/V	302
Parallel hand	Cross roller parallel hand	HKP	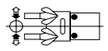		32CS (24) 40CS (30) 50CS (36) 63CS (40)	T2H/V T3H/V	310
Parallel hand	Thin parallel hand (bush type) (bearing type)	HLA/HLB		HLA 12CS (15) HLA 15CS (20) HLB 12CS (13) HLB 15CS (18)	HLA 20CS (25) HLB 20CS (23)	K2H/V, K3H/V K0H/V, K5H/V	316
Parallel hand	Rubber covered thin parallel hand (bush type) (bearing type)	HLAG/HLBG		HLAG 12CS (15) HLAG 15CS (20) HLBG 12CS (13) HLBG 15CS (18)	HLAG 15CS (25) HLBG 20CS (23)	K2H, K3H K0H, K5H	324
Parallel hand	Bearing parallel hand	HEP			3.5CS (24) 4CS (36) 5CS (40) 6CS (50) 7CS (60)	T2H/V T3H/V	332
Parallel hand	Lateral parallel hand	HCP		2CS (20) 3CS (30)	4CS (40)	T2H/V T3H/V	338
Parallel hand	Compact wide parallel hand	HMF	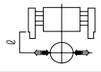	12CS (20)	16CS (30) 20CS (40) 25CS (50) 32CS (70) 40CS (100)	T2H/V T3H/V	344
Parallel hand	LM guided large wide parallel hand	HMFB	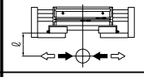		25CS (100) 32CS (120) 40CS (160)	T2H/V T3H/V	354
Parallel hand	Wide parallel hand	HFP		2CS (20)	3CS (30) 4CS (40) 5CS (60)	T2H/V T3H/V	360
Parallel hand	Thin type long stroke parallel hand	HLC	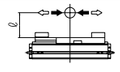		16CS (40) 20CS (50) 25CS (60) 30CS (70)	T2H/V T3H/V	366
Parallel hand	Long stroke parallel hand	HGP		3CS (56)		T2H/V T3H/V	372

(Example)
110 (8)
Model Gripping power Stroke length (mm) or open and close degree

Hand (wide angle/centering hand)

* Refer to pages 256 to 257 for parallel hand.

Range of gripping power at supply pressure 0.5MPa and general jaw length

(Note) Grip applies to one jaw.
The actual value is grip x 2.

	Variation	Model no.	Action of jaw (J)	Gripping power (N)	Switch model no.	Page
Wide angle hand	Feather hand (Min-fulcrum hand)	FH500		510 (10° open -25° closed); 512 (10° open -25° closed); 516 (10° open -25° closed); 520 (10° open -25° closed)	T2H/V T3H/V	376
Wide angle hand	Fulcrum hand	HBL		1C (15); 2CS (20); 3CS (25); 4CS (40)	T2H/V T3H/V	382
Wide angle hand	Wide angle hand	HDL		3CS (25); 4CS (40)	T2H/V T3H/V	388
Wide angle hand	Thin wide angle hand	HMD		16C (184° open -4° closed); 25C (184° open -4° closed)	T2H/V T3H/V	392
Parallel hand	Toggle hand	HJL		32CS (28° open -3° closed); 40CS (28° open -3° closed); 50CS (28° open -3° closed); 63CS (28° open -3° closed)	T2H/V T3H/V	396
Centering hand	Centering hand	BHE		01CS (7); 03CS (10); 04CS (14); 05CS (16); 06CS (22)	T2H/V T3H/V	402

Gripping power (N): 5, 10, 50, 50, 100, 500, 1000, 2000

(Example)
110 (8)
Model | Gripping power | Stroke length (mm) or open and close degree

Pneumatic components

Safety precautions

Always read this section before starting use.
Refer to Intro 69 for general precautions of the cylinder, and to Intro 78 for general precautions of the cylinder switch.

Hand Series

Design & Selection

1. COMMON

WARNING

■ If the moving workpiece poses a possible risk to personnel or if fingers could be caught in the master key, etc., install a protective cover, etc.

■ If circuit pressure drops due to a service interruption or problems in the air source, gripping power drops and the workpiece could drop. Provide position locking measures, etc., so that personnel are not injured or machines damaged.

CAUTION

■ Cautions on gripping power

● The grip is for one master jaw when all master and small jaws contact the workpiece as shown below.

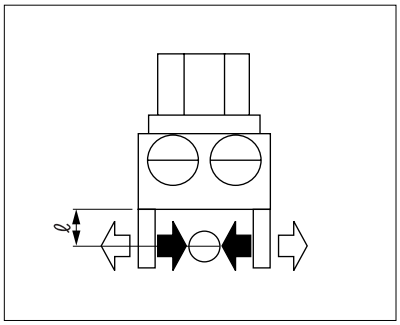

● Performance data indicates the gripping power at hand jaw length ℓ at a supply pressure of 0.15 to 0.7 MPa.

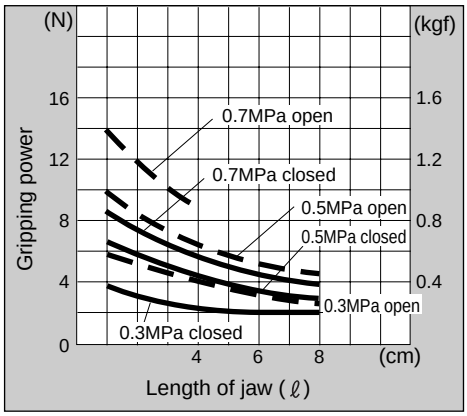

● To obtain gripping power from performance data, if the distance to the workpiece's center of gravity is ℓ when manufacturing the small jaw, gripping power F is expressed as follows

When ℓ = ℓ 1, then F = F1
When ℓ = ℓ 2, then F = F2

Refer to the drawing below.

● The jaw's working max. length can be used within performance data.
When N is used to express the number of jaws as reference for the coefficient for transferring workpiece weight W_L

WL × 9.8: (F × N) = 1:5 (only gripping)
WL × 9.8: (F × N) = 1:10 (normal transfer)
WL × 9.8: (F × N) = 1:20 (sudden acceleration transfer)
WL × 9.8: Workpiece weight (kg)
F: Gripping power (N)
N: Number of jaws

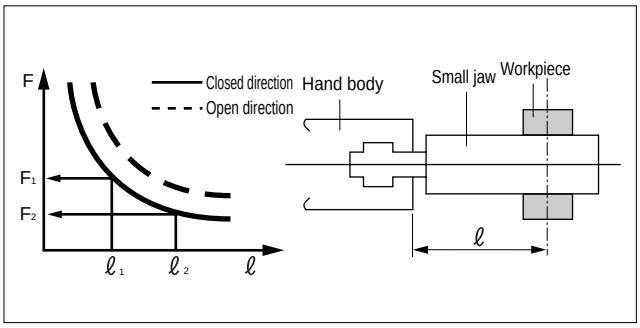

■ Use as short and light a small jaw as possible.
If the small jaw is long and heavy, inertia increases when opening and closing. This may cause play in the master key, and may adversely affect life.

● The small jaw's length must be within performance data.
● The weight of the small jaw affects life, so check that it is within the following value.

W < 1/4H (1 pc.) W: Weight of small jaw
H: Product weight of hand

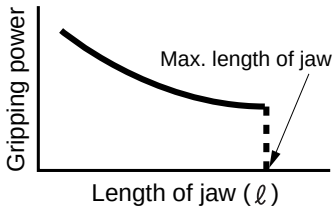

■ When gripping a long object or large workpiece, the center of gravity must be gripped to provide stable prehension. It is also necessary to stabilize prehension by increasing the size or using multiple jaws.

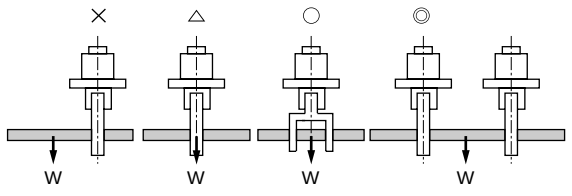

■ Select a model that has sufficient power to grip the workpiece weight.

■ Select a model that has sufficient opening/closing width for the workpiece size.

■ If directly inserting the workpiece into the jig with the hand, consider clearance during design to avoid damaging the hand.

Hand

● Pushing against jig with spring

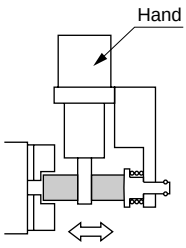

● Using a press-in cylinder

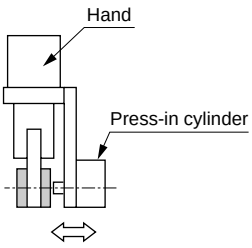

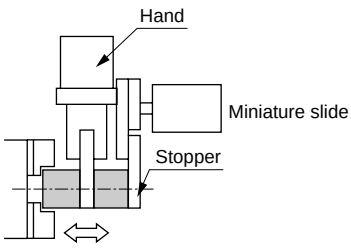

Note) The workpiece is slid along the top of the small jaw, so chuck life could drop markedly. Sufficient consideration should be made for the shape of the small jaw.

■ If the small jaw is not rigid enough, resulting deflection could cause the master jaw to twist or adversely affect operation.

■ Adjust the chuck open/close speed with the speed control valve (optional).
Play may occur quickly when used at a high speed.

Installation & Adjustment

1. COMMON

⚠ CAUTION

■ If a lateral load or load with a large impact is applied to the master key, play or damage could occur in the master key. Adjust and check that external force is not applied to the master key.

■ The cylinder switch could malfunction if there is magnetic substance, such as a steel plate, near the cylinder switch. Keep magnetic substance at least 10mm from the cylinder.

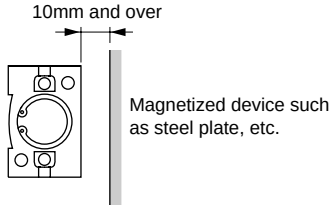

■ The cylinder switch could malfunction if cylinders are installed adjacently. Check that the following distances are provided between cylinders.

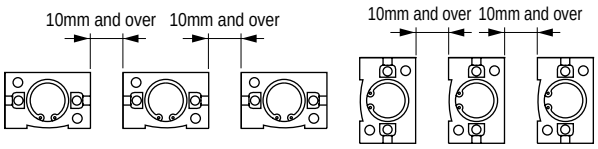

■ If the clamp is operated carefully and slowly as possible, accuracy increases. Repeatability also stabilizes.

■ Regularly grease the sliding section of the master key. Periodic replenishment of grease will extend the life of the part.

■ Installing the jaw

To prevent any effect onto the hand, support the master key with a wrench, etc., and tighten so that the master key is not twisted.

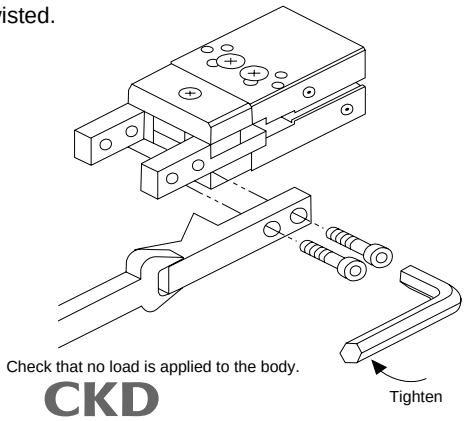

2. Installation

■ Do not cause dents or scratches that may worsen flatness or perpendicularity on the fixing face or master key.

■ If there is a limit to the thickness direction of the FH series body, the available piping joint will be limited. Refer to the following joints.

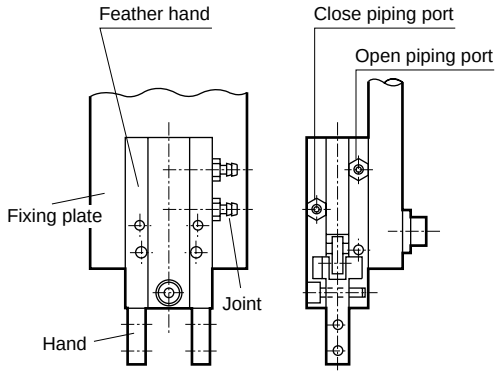

Model		FH*10	FH*12		FH*16	FH*20	FH*25
Port size		M3			M5		
Joint		Model no.	Applicable O.D. (mm)	Effective sectional area (mm²)	Model no.	Applicable O.D. (mm)	Effective sectional area (mm²)
Barbed joint	Straight FTS 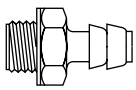	FTS4-M3	φ3.2·φ4	0.4	FTS4-M5	φ3.2·φ4	2.1
		-	-	-	FTS6-M5	φ6	4.1

■ Refer to the section below for details on installing the FH series.

● Top installation

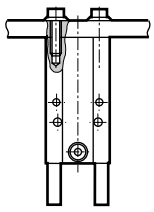

● Front installation

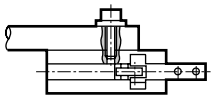

Note) When a switch is provided, screw the bolt into as shown below so the switch is not pressed by the end of the bolt.

Note) Check that the fixed plate does not overlap the master jaw support.

● Side installation

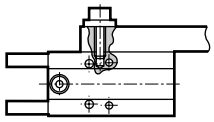

Model	Applicable bolt size	Max. screw depth (mm)	Recommended tightening torque (N·cm)
FH*10	M3×0.5	4.5	70
FH*12	M3×0.5	4.5	70
FH*16	M4×0.7	6	160
FH*20	M5×0.8	7.5	330
FH*25	M5×0.8	12	330

● Use of throught hall

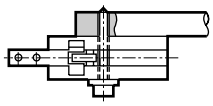

Model	Applicable bolt size	Recommended tightening torque (N·cm)
FH*10	M3 ×0.5	32
FH*12	M2.5×0.45	32
FH*16	M3 ×0.5	90
FH*20	M4 ×0.7	210
FH*25	M4 ×0.7	210

Note) A throught hall cannot be used when a switch is provided.

Note) Check that the fixed plate does not overlap the master jaw support.

■ When installing the small jaw, check that a lateral load is not applied to the master key.

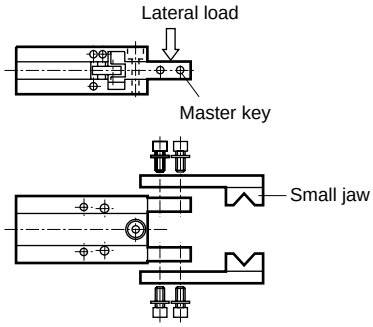

■ Tighten with the following tightening torque.

Screw nominal	M3	M4	M5	M6	M8
Recommended tightening torque (N·m)	0.59	1.4	2.8	4.8	12.0

During Use & Maintenance

⚠ CAUTION

■ Do not dissemble or modify the body.

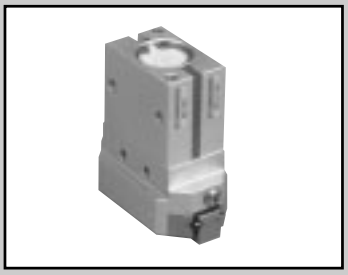

Centering hand

BHE Series

● Operational stroke length: 7, 10, 14, 16, 22mm

RoHS CAD

Specifications

Descriptions	BHE-01CS	BHE-03CS	BHE-04CS	BHE-05CS	BHE-06CS
Cylinder bore size mm	ϕ12	ϕ16	ϕ20	ϕ25	ϕ32
Working fluid	Compressed air				
Max. working pressure MPa	0.7				
Min. working pressure MPa	0.2				
Ambient temperature ℃	5 to 60				
Port size	M3		M5		
Operational stroke length mm	7	10	14	16	22
Rod diameter mm	ϕ6	ϕ8	ϕ10	ϕ12	ϕ16
Repeatability mm	±0.01				
Centering precision mm	±0.05				
Product weight kg	0.108	0.154	0.260	0.438	1.040
Lubrication	Not required (when lubricating, use turbine oil Class 1 ISO VG32)				

Switch specifications

Descriptions	Proximity 2 wire	Proximity 3 wire
	T2H/V	T3H/V
Applications	Programmable controller	Programmable controller, relay
Output method	-	NPN output
Power voltage	-	10 to 28 VDC
Load voltage/current	10 to 30 VDC, 5 to 20 mA (Note 1)	30 VDC or less, 100mA or less
Light	LED (ON lighting)	
Leakage current	1mA or less	10μA or less

Note 1: Max. load current above: 20 mA at 25℃. The current will be lower than 20mA if ambient temperature around switch is higher than 25℃. (5 to 10mA with 60℃)

* The BHE-LN Series with a length measurement sensor is also available. Refer to page 211 for details.

How to order

BHE - 03CS - D - T2H - R

Ⓐ Size

Ⓑ Option
Note 1

Ⓒ Switch model no.

Ⓓ Switch quantity

Symbol	Descriptions
Ⓐ Size	
01CS	
03CS	
04CS	
05CS	
06CS	
Ⓑ Option	
Blank	Standard
D	Open angle adjustment mechanism
E	Close angle adjustment mechanism
DE	Open and close angle adjustment function

Ⓒ Switch model no.

Axial lead wire	Radial lead wire	Contact	Indicator	Lead wire
T2H*	**T2V***	Proximity	1 color indicator type	2-wire
T3H*	**T3V***			3-wire

***Lead wire length**	
Blank	1m (standard)
3	3m (option)
5	5m (option)

Ⓓ Switch quantity	
R	One on open side
H	One on closed side
D	Two

<Example of model number>
BHE-03CS-D-T2H-R

Ⓐ Size : 03CS
Ⓑ Option : Open angle adjustment mechanism
Ⓒ Switch model no. : Proximity T2H, lead wire 1m
Ⓓ Switch quantity : One on open side

How to order switch

SW - T2H

Switch model no.
(Item above Ⓒ)

RRC
GRC
RV3*
NHS
HR
LN
FH100
HAP
BSA2
BHA/BHG
LHA
LHAG
HKP
HLA/HLB
HLAG/HLBG
HEP
HCP
HMF
HMFB
HFP
HLC
HGP
FH500
HBL
HDL
HMD
HJL
BHE
CKG
CK
CKA
CKS
CKF
CKJ
CKL2
CKL2-*-HC
CKH2
CKLB2
NCK/SCK/FCK
FJ
FK
Ending

Internal structure and parts list

● BHE-01CS to 06CS

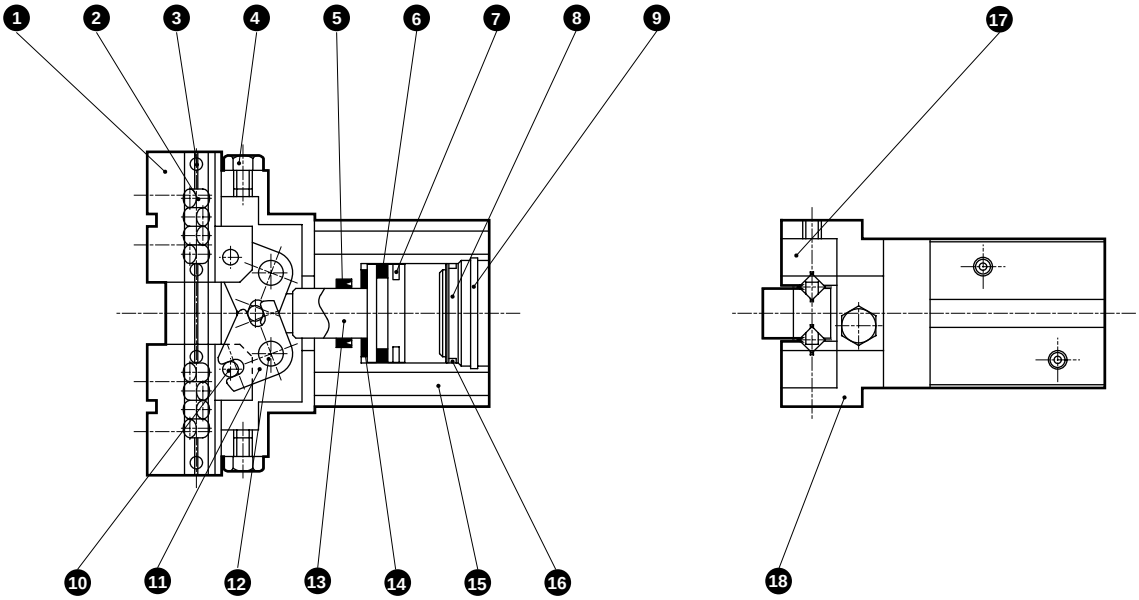

No.	Parts name	Material	Remarks	No.	Parts name	Material	Remarks
1	Master key	Stainless steel		10	Operation axis	High carbon chrome bearing steel	
2	Cross roller	High carbon chrome bearing steel		11	Arm	Stainless steel	
3	Spring pin	Stainless steel		12	Fulcrum axis	High carbon chrome bearing steel	
4	Plug	Brass		13	Piston	Stainless steel	
5	Rod packing seal	Nitrile rubber		14	Cushion	Urethane rubber	
6	Piston packing seal	Nitrile rubber		15	Cylinder	Aluminum alloy	
7	Magnet			16	Cylinder gasket	Nitrile rubber	
8	Cylinder guard	Resin		17	Bearing guide	Stainless steel	
9	Snap ring	Stainless steel		18	Body	Aluminum alloy	

Option internal structure drawing

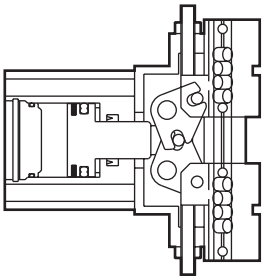

Open angle adjustment mechanism
(Option: D)

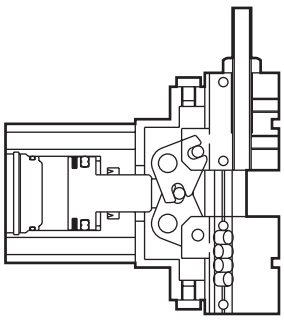

Close angle adjustment mechanism
(Option: E)

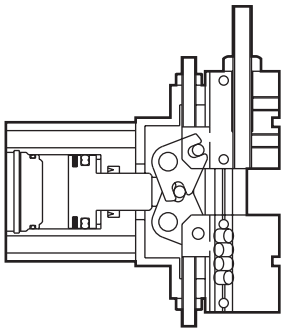

Open and close angle adjustment mechanism
(Option: DE)

Gripping power performance data

Gripping power that functions to open and closed directions with jaw length ℓ of hand at supply pressure 0.3, 0.5 and 0.7 MPa is shown.

- Open direction (⇦) - - - - - - (shown with broken line)
- Closed direction (➡) ———— (shown with continuous line)

(Note) Grip performance data indicates the grip for one jaw. Since two jaws are used, double the grip in the graph when making a selection.

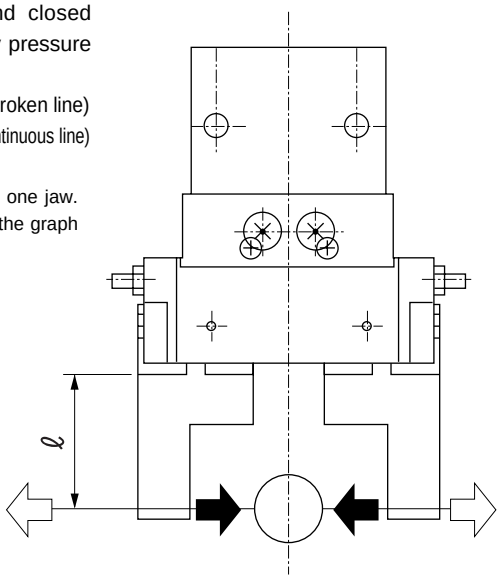

● BHE-01CS

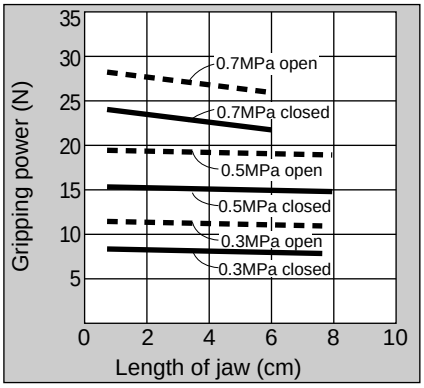

● BHE-03CS

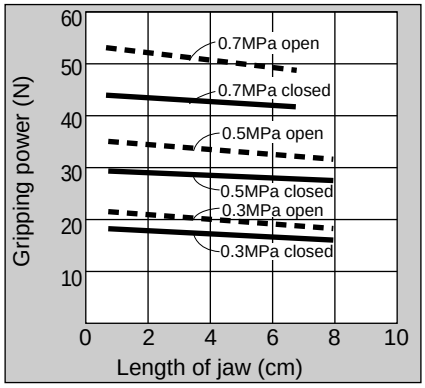

● BHE-04CS

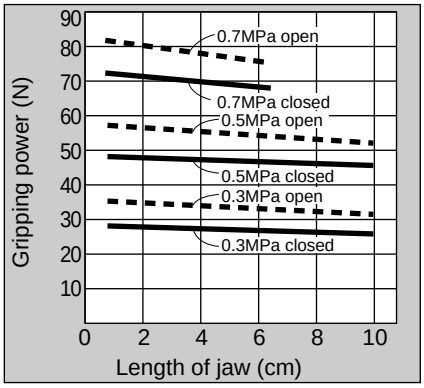

● BHE-05CS

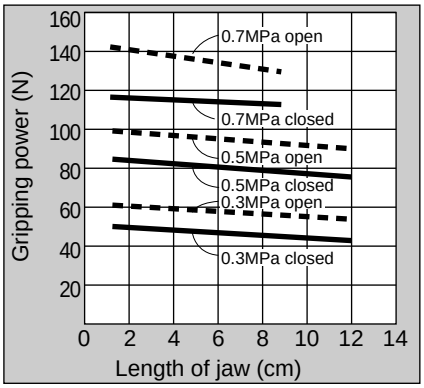

● BHE-06CS

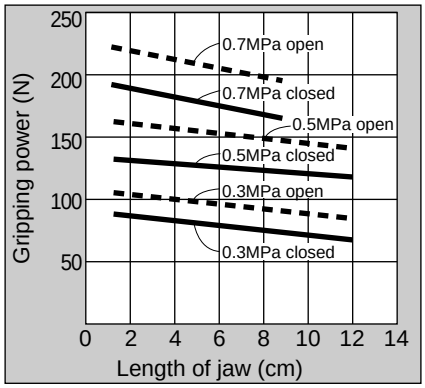

RRC
GRC
RV3*
NHS
HR
LN
FH100
HAP
BSA2
BHA/BHG
LHA
LHAG
HKP
HLA/HLB
HLAG/HLBG
HEP
HCP
HMF
HMFB
HFP
HLC
HGP
FH500
HBL
HDL
HMD
HJL
BHE
CKG
CK
CKA
CKS
CKF
CKJ
CKL2
CKL2-*-HC
CKH2
CKLB2
NCK/SCK/FCK
FJ
FK
Ending

Dimensions

- BHE-01CS (standard)
- BHE-01CS-D (with open angle adjustment mechanism)

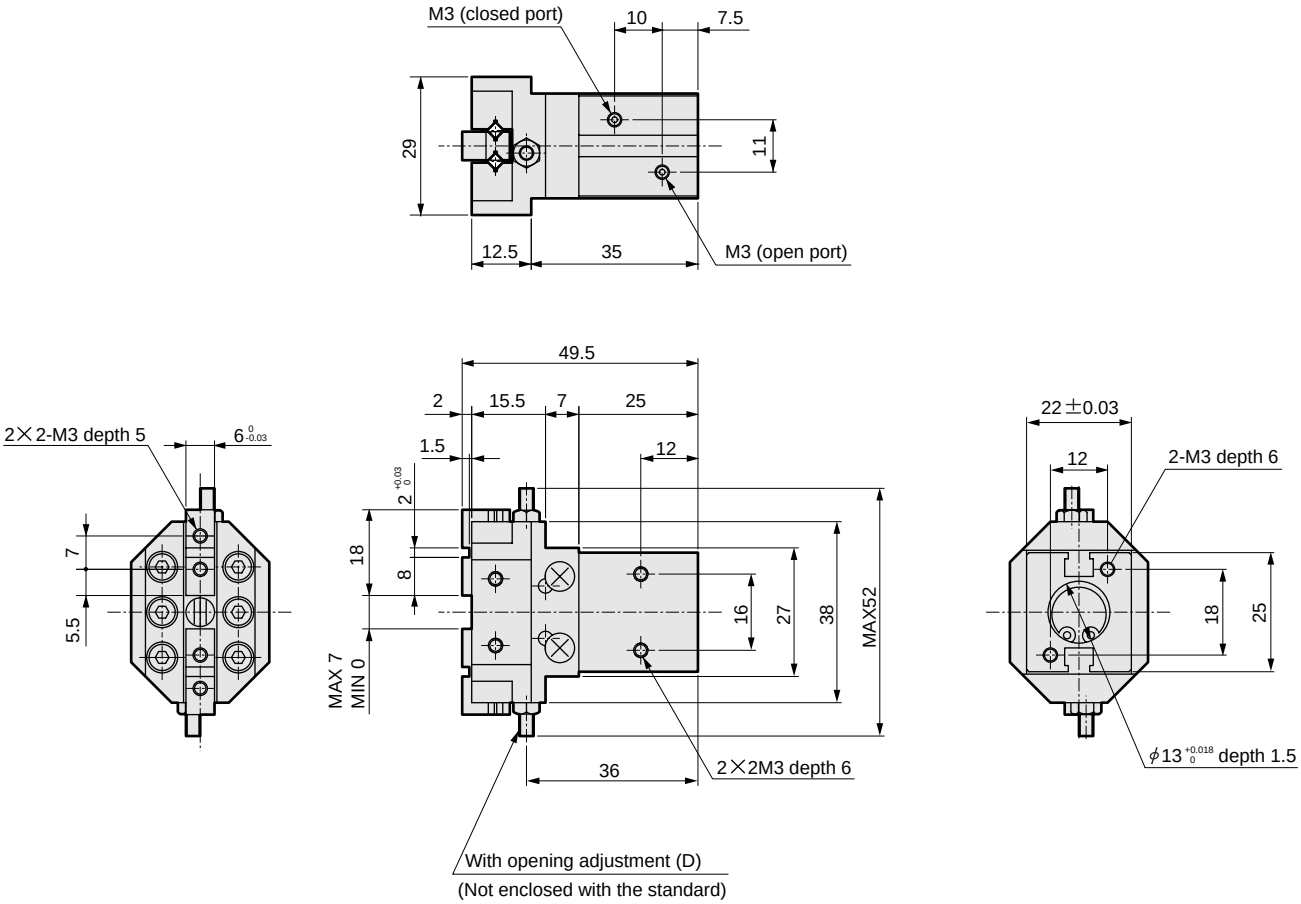

- BHE-01CS-E (with close adjustment)
- BHE-01CS-DE (open and close adjustment)

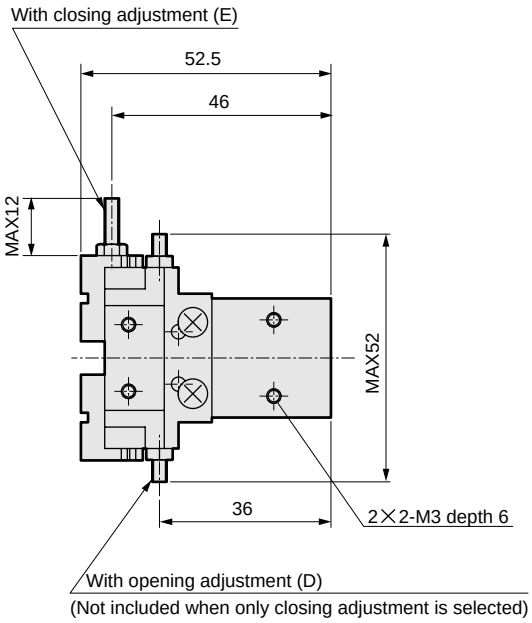

- With switch

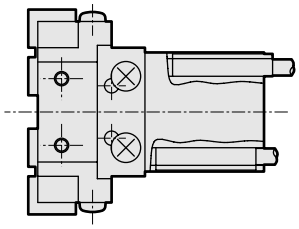

Dimensions

- BHE-03CS (standard)
- BHE-03CS-D (with open adjustment)

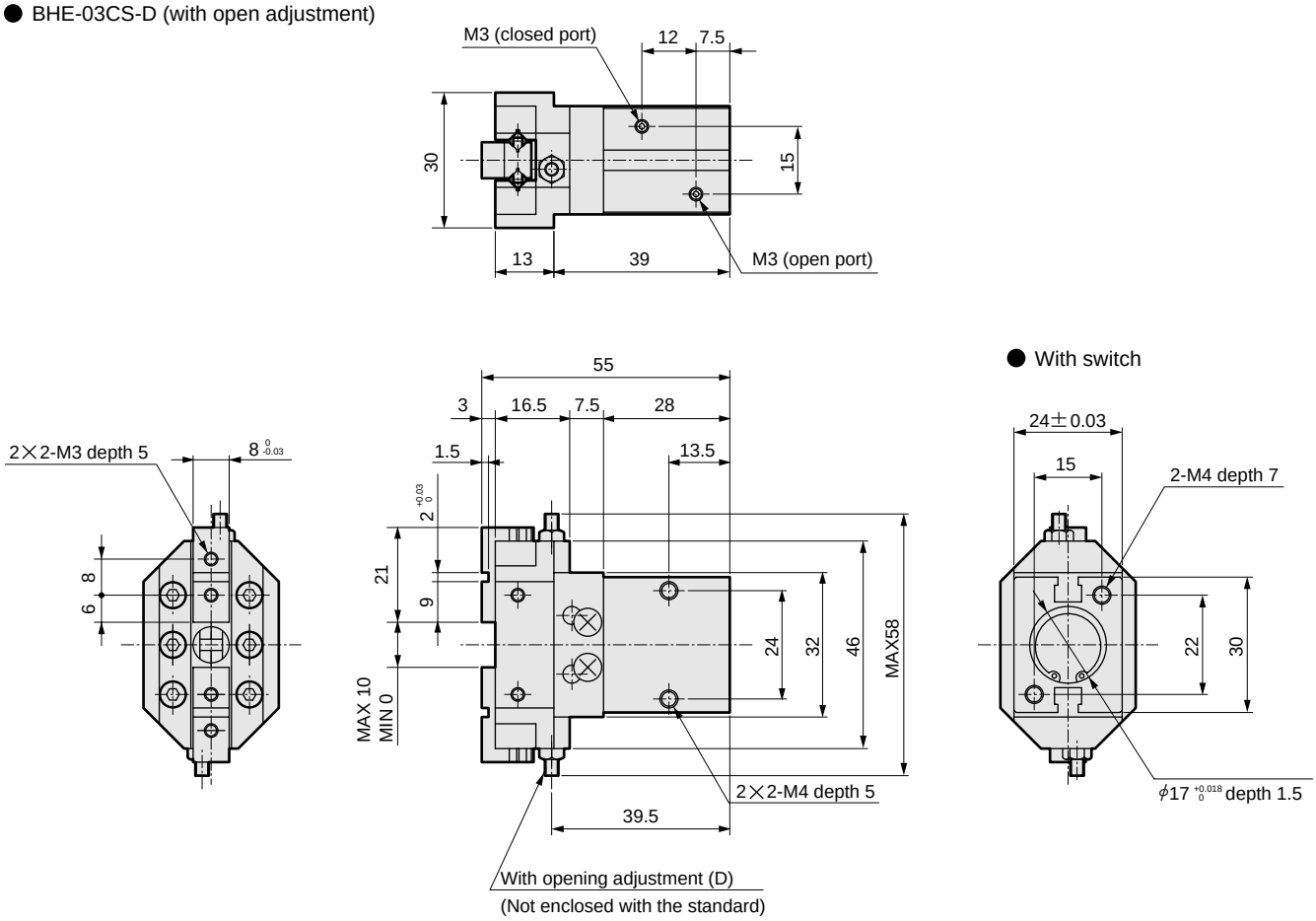

- BHE-03CS-E (with close adjustment)
- BHE-03CS-DE (open and close adjustment)

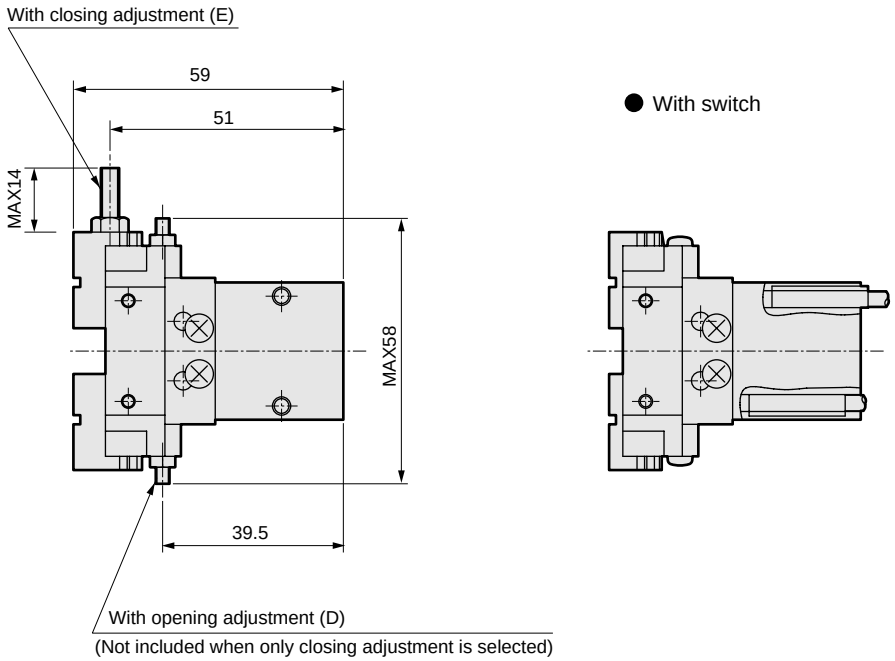

RRC
GRC
RV3*
NHS
HR
LN
FH100
HAP
BSA2
BHA/BHG
LHA
LHAG
HKP
HLA/HLB
HLAG/HLBG
HEP
HCP
HMF
HMFB
HFP
HLC
HGP
FH500
HBL
HDL
HMD
HJL
BHE
CKG
CK
CKA
CKS
CKF
CKJ
CKL2
CKL2-*-HC
CKH2
CKLB2
NCK/SCK/FCK
FJ
FK
Ending

Dimensions

CAD

● BHE-04CS (standard)
● BHE-04CS-D (with open adjustment)

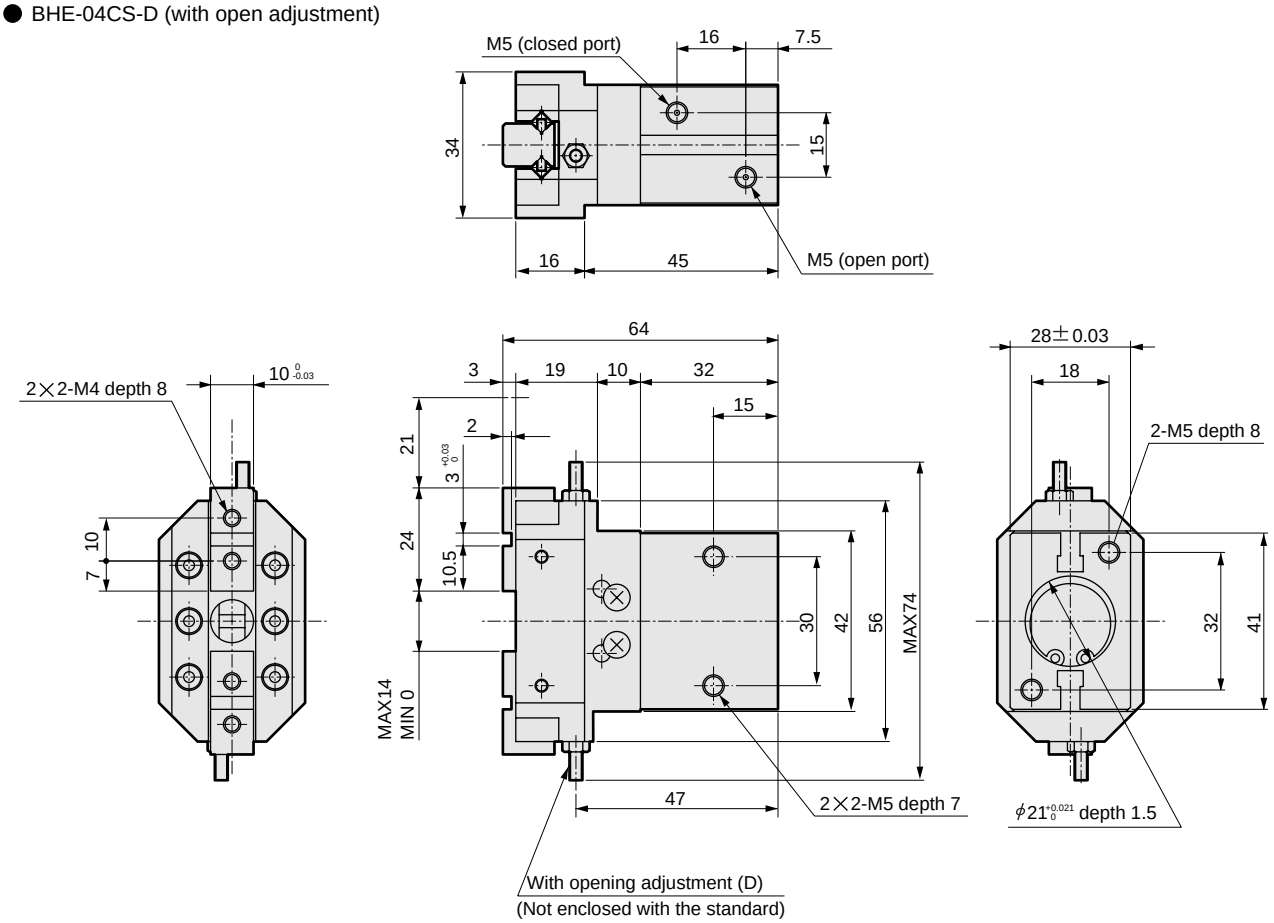

● BHE-04CS-E (with close adjustment)
● BHE-04CS-DE (open and close adjustment)

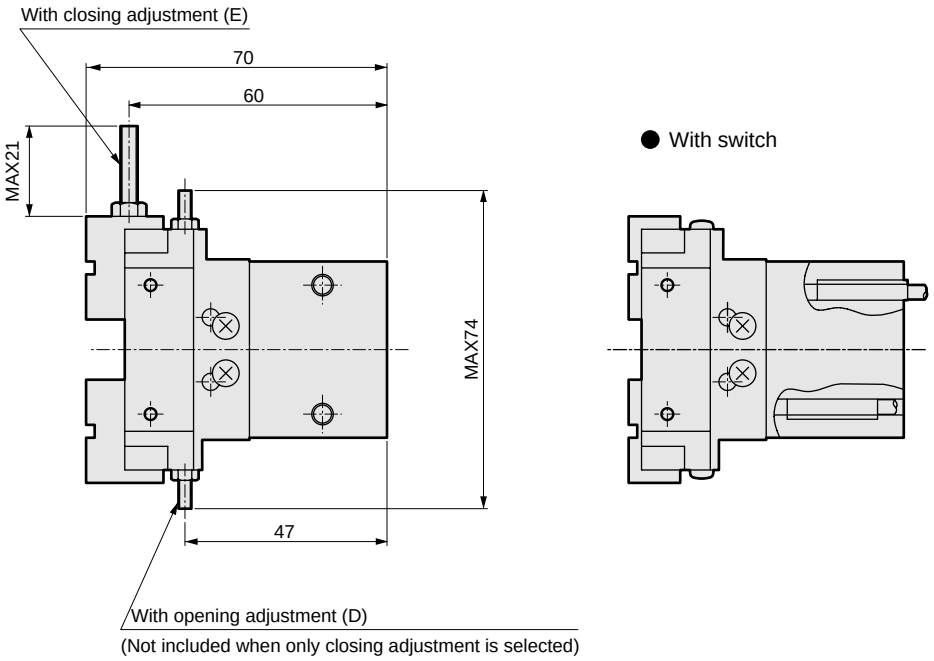

Dimensions

- BHE-05CS (standard)
- BHE-05CS-D (with open adjustment)

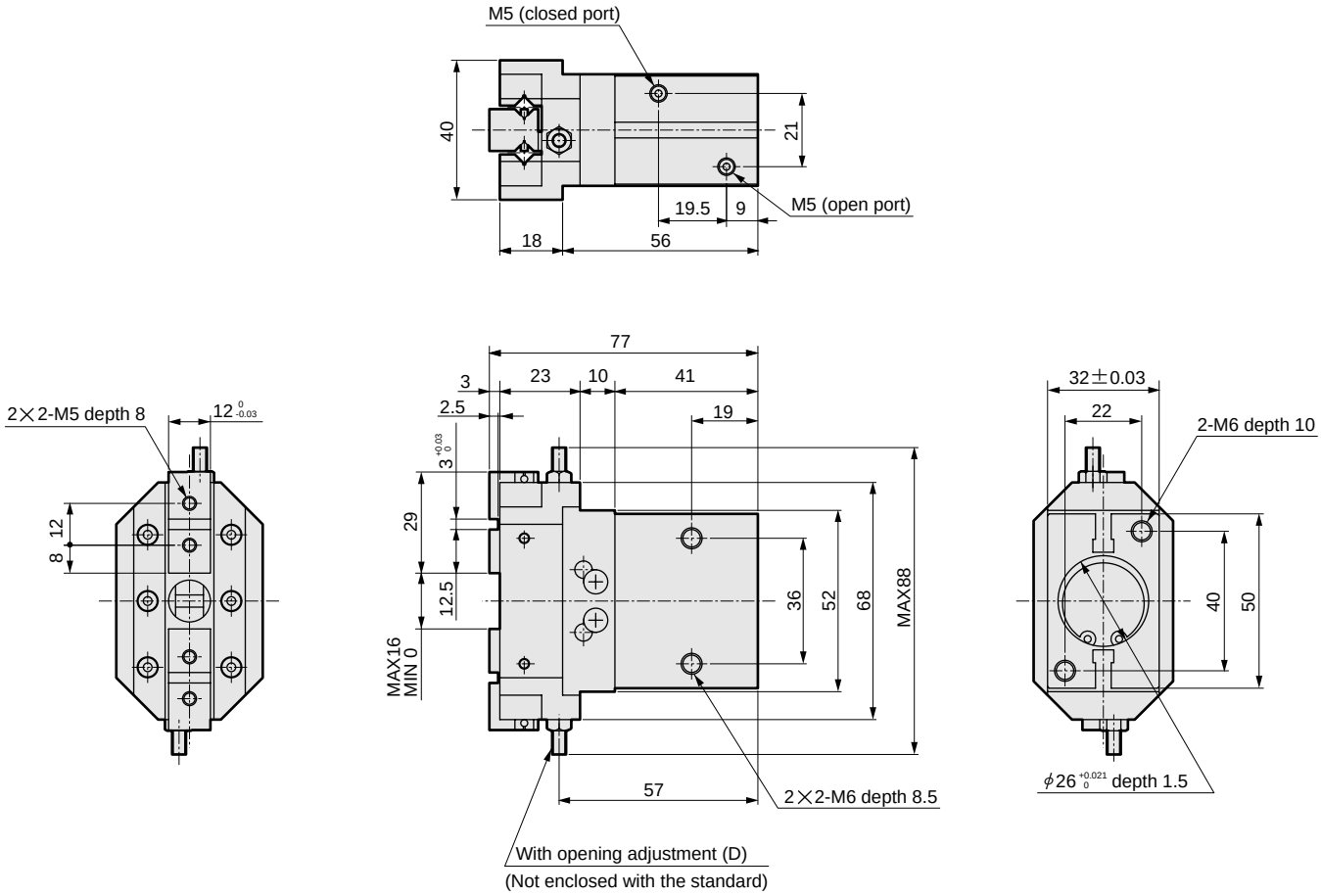

- BHE-05CS-E (with close adjustment)
- BHE-05CS-DE (open and close adjustment)

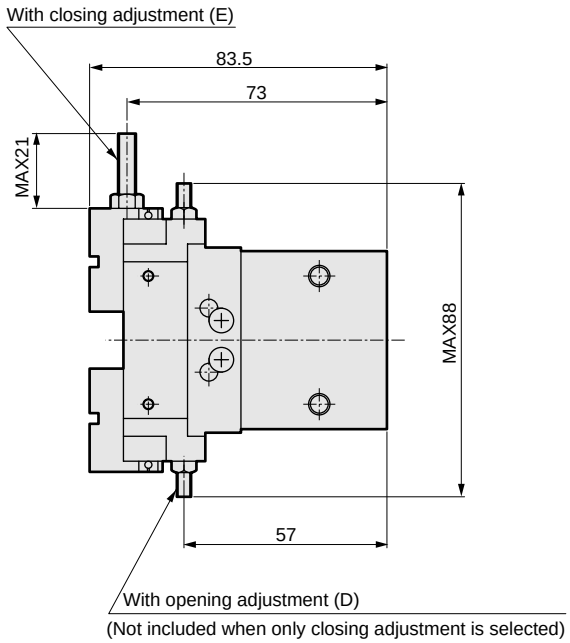

- With switch

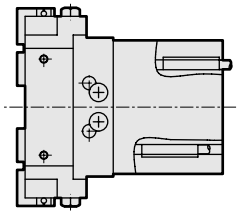

RRC
GRC
RV3*
NHS
HR
LN
FH100
HAP
BSA2
BHA/BHG
LHA
LHAG
HKP
HLA/HLB
HLAG/HLBG
HEP
HCP
HMF
HMFB
HFP
HLC
HGP
FH500
HBL
HDL
HMD
HJL
BHE
CKG
CK
CKA
CKS
CKF
CKJ
CKL2
CKL2-*-HC
CKH2
CKLB2
NCK/SCK/FCK
FJ
FK
Ending

Dimensions

- BHE-06CS (standard)
- BHE-06CS-D (with open adjustment)

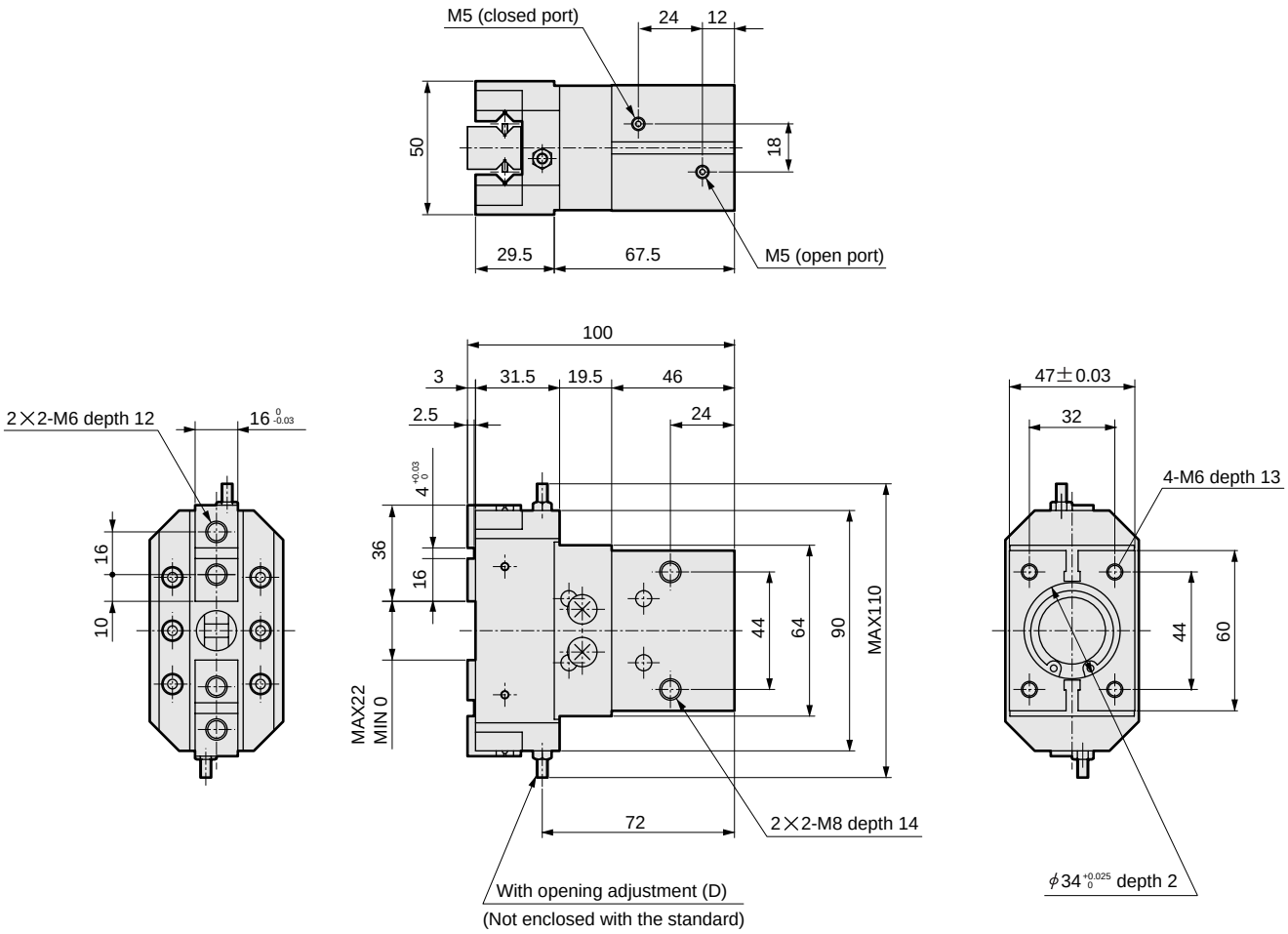

- BHE-06CS-E (with close adjustment)
- BHE-06CS-DE (open and close adjustment)

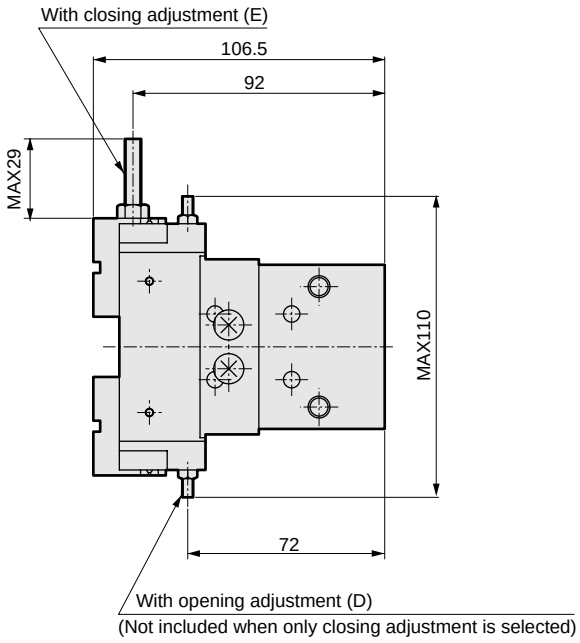

- With switch

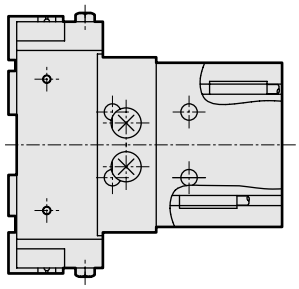

Small jaw

● Material: Iron, engineering plastic

RoHS CAD

Features

A variety of small jaws is available to match user machining needs.

● **Socket and spigot section machined**

Standard section (socket and spigot section) machined.

Wide series variation to select according to workpiece shape and dimension.

● **2 types of materials for small jaw**

Iron (S50C) and engineering plastic (MC nylon) are available according to material and working conditions of workpiece.

Applicable model for standard small jaw

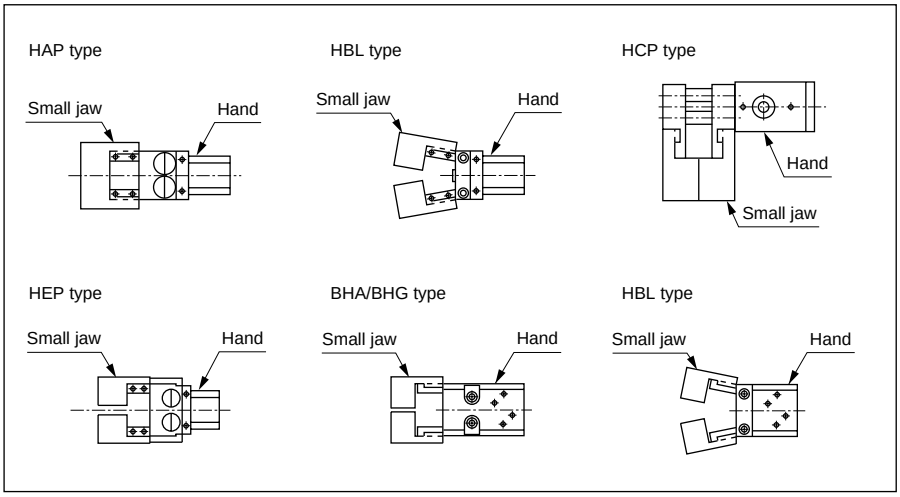

Small jaw applications

Hand type applications

Raw jaw	Compact workpiece	Large workpiece
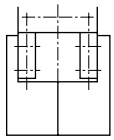	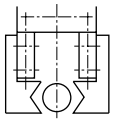	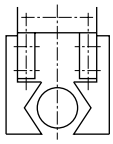
Miscellaneous shape workpieces	**Vertical grasp (inside tensile workpiece)**	**Vertical grasp**
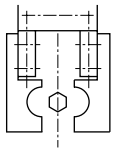	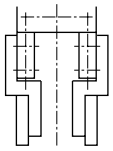	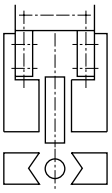

How to order

(Note: When ordering repair parts, 1 pc. is provided.)

BHA - **Y1** - **110**

Ⓐ Model Ⓑ Material Ⓒ Small jaw no.

Ⓐ Model		Ⓑ Material		Ⓒ Small jaw no.			
Symbol	Descriptions	Symbol	Descriptions	Symbol	Applicable model	Symbol	Applicable model
FH	Feather hand (FH100/FH500)	**Y1**	Material S50C	**110**	HAP-1C	**210**	HEP-5CS
HAP	Parallel hand	**Y2**	Material MC nylon	**120**	HAP-2CS, HBL-2CS	**310**	FH110, FH510
BHA	Compact cross roller parallel hand			**130**	HAP-3CS, HBL-3CS	**320**	FH112, FH512
BHG	Compact cross roller parallel hand with rubber cover			**140**	HAP-4CS, HBL-4CS	**330**	FH116, FH516
HEP	Bearing parallel hand			**150**	HBL-1CS	**340**	FH120,FH520
HCP	Lateral parallel hand			**160**	HCP-2CS	**350**	FH125
HBL	Fulcrum hand			**170**	HCP-3CS	**260**	BHA-01CS1, BHG-01CS
				180	HCP-4CS	**270**	BHA-03CS1, BHG-03CS
				190	HEP-3.5CS	**280**	BHA-04CS1, BHG-04CS
				200	HEP-4CS	**290**	BHA-05CS1, BHG-05CS

Dimensions

● 110 to 350

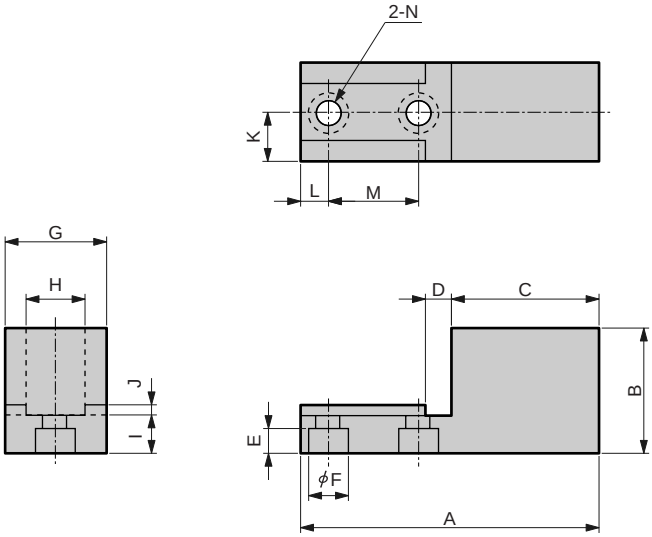

*Material
Y1: S50C
Y2: MC nylon

Small jaw no.	Applicable model	*Material	Dimension (mm) A	B	C	D	E	ϕF	G	$H_0^{+0.02}$	I	J	K	L	M	ϕN	Weight (g)
110	HAP-1C	Y1	40	17	24.5	4.5	3	6	10	8	5	1.5	5	3.5	8	3.5	39
		Y2		21							9						8
120	HAP-2CS	Y1	50	26	28	5.5	4	8	20	10	6	2	10	5	12	4.5	135
	HBL-2CS	Y2		30							10						25
130	HAP-3CS	Y1	60	33	30.5	6.5	5	9.5	20	12	8	2	10	5.5	18	5.5	194
	HBL-3CS	Y2															29
140	HAP-4CS	Y1	80	43	44	7.5	6	11	20	14	10	2	10	8	20	6.5	352
	HBL-4CS	Y2		50							17						53
150	HBL-1C	Y1	40	19	19	4.5	3	6	12	8	5	1.5	6	4	10	3.5	44
		Y2			21												7
160	HCP-2CS	Y1	60	29	33	9.5	5	9.5	22	$18^{+0.2}_{+0.1}$	9	2	11	11	10	5.5	206
		Y2															31
170	HCP-3CS	Y1	70	35	34	11.5	6	11	25	$20^{+0.2}_{+0.1}$	10	2	12.5	8	20	6.5	303
		Y2															45
180	HCP-4CS	Y1	80	40	42	13	6	11	35	$25^{+0.2}_{+0.1}$	10	2	17.5	10	20	6.5	563
		Y2	78	44						25	14			8			97
190	HEP-3.5CS	Y1	80	41	50	7.5	5	9.5	20	14	10	2	10	6	18	5.5	360
		Y2		49							18						70
200	HEP-4CS	Y1	120	60	81	11.5	6	11	30	22	13	2	15	8	20	6.5	1245
		Y2		77					32		30		16				270
210	HEP-5CS	Y1	135	60	91	14.5	8	14	30	28	16	2	15	10	25	8.5	1443
		Y2		79					38		35		19				382
310	FH110	Y1	29.5	15	14	4.5	3	6	12	7	4	1.5	6	3.5	8	3.5	22
	FH510	Y2															4
320	FH112	Y1	29.5	16.5	14	4.5	3	6	12	7	4	1.5	6	3.5	8	3.5	23
	FH512	Y2															4
330	FH116	Y1	39	20	20.5	5.5	4	8	12	10	5	1.5	6	3.5	10	4.5	48
	FH516	Y2															8
340	FH120	Y1	39	22.5	20.5	5.5	4	8	12	10	5	1.5	6	3.5	10	4.5	53
	FH520	Y2		25.5							8						10
350	FH125	Y1	48.5	22.5	28.5	6.5	5	9.5	14	12	8	2	7	4.5	10	5.5	105
		Y2		25.5							14						17
260	BHA-01CS1	Y1	30	17.5	14.5	4.5	3	6	14	10	5	1.5	7	4	8	3.5	38
	BHG-01CS	Y2															6
270	BHA-03CS1	Y1	40	21	21	5.5	4	8	14	10	6	1.5	7	4.5	10	4.5	61
	BHG-03CS	Y2		23							8						11
280	BHA-04CS1	Y1	40	26.5	21	5.5	4	8	14	10	6	1.5	7	4.5	10	4.5	76
	BHG-04CS	Y2		29.5							9						12
290	BHA-05CS1	Y1	50	33	28.5	6.5	5	9.5	14	10	8	2	7	6	10	5.5	123
	BHG-05CS	Y2		39							14						23