Explosion proof direct acting 2 port solenoid valve
(general purpose valve)

AB41E2 Series

- Pressure and explosion proof structure d2G2 (flame-proof grade 2, ignitability G2)
- NC (normally closed) type
- Port size: Rc1/4, Rc3/8

RoHS CAD

JIS symbol

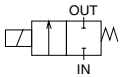

Common specifications

Item	AB41E2
Working fluid	Air, water, kerosene, oil (50 mm²/s or less), steam
Working pressure differential range MPa	0 to 5 (refer to max. working pressure differential in individual specifications.)
Max. working pressure MPa	5 (for fluid, 1 for steam)
Withstanding pressure (water) MPa	25
Fluid temperature ˚C	-10 to 181
Ambient temperature ˚C	-10 to 40
Heat proof class	H
Atmosphere	Outdoors/flammable etc. (flame-proof grade 1 to 2, ignitability G1 to G2)
Valve structure	Direct acting poppet structure
Valve seat leakage cm³/min. (ANR)	300 or less (air)
Mounting attitude	Free
Weight kg	1.1

Individual specifications

Item / Model no.	Port size	Orifice (mm)	Max. working pressure diff. (MPa)				Rated voltage	Apparent power (VA)				Power consumption (W)	
			Air	Water, hot water, kerosene	Oil (50 mm²/s)	Steam		Holding		Starting		AC	
			AC	AC	AC	AC		50 Hz	60 Hz	50 Hz	60 Hz	50 Hz	60 Hz
AB41E2-02-1	Rc1/4	1.5	5.0	4.5	4.0	1.0	100 VAC 50/60 Hz 110 VAC 60 Hz	18	15	29	24	8	7
-2		2.0	3.0	2.7	2.5	1.0							
-3		3.0	1.5	1.3	0.9	1.0							
-4		3.5	1.2	0.9	0.6	0.9							
-5		4.0	1.0	0.7	0.5	0.7							
-6		5.0	0.6	0.4	0.25	0.4							
-7		7.0	0.25	0.2	0.15	0.2							
AB41E2-03-1	Rc3/8	1.5	5.0	4.5	4.0	1.0	200 VAC 50/60 Hz 220 VAC 60 Hz						
-2		2.0	3.0	2.7	2.5	1.0							
-3		3.0	1.5	1.3	0.9	1.0							
-4		3.5	1.2	0.9	0.6	0.9							
-5		4.0	1.0	0.7	0.5	0.7							
-6		5.0	0.6	0.4	0.25	0.4							
-7		7.0	0.25	0.2	0.15	0.2							

*1: Voltage fluctuation should be within -10 to +5% of the rated voltage.

Flow characteristics

Model no.	Port size	Orifice (mm)	Flow characteristics		
			C [dm³/(s·bar)]	b	Cv flow factor
AB41E2-02/03-1	Rc1/4 Rc3/8	1.5	0.29	0.53	0.1
-2		2.0	0.53	0.52	0.15
-3		3.0	1.1	0.52	0.31
-4		3.5	1.7 (1.5)	0.49 (0.47)	0.42 (0.40)
-5		4.0	2.1 (1.9)	0.48 (0.47)	0.54 (0.48)
-6		5.0	3.0 (2.6)	0.42 (0.38)	0.8 (0.62)
-7		7.0	4.8 (4.6)	0.29 (0.37)	1.0 (0.82)

*1: Effective sectional area S and sonic conductance C are converted as S = 5.0 × C.
*2: Values shown in ( ) are for stainless steel body.

How to order

AB41E2 - 02 - 4 - C 4 T B - AC100V

- AB41E2: Model no.
- 02: Ⓐ Port size
- 4: Ⓑ Orifice
- C: Ⓒ Body/sealant combination
- 4: Ⓓ Type of coil
- T: Ⓔ Junction box *2
- B: Ⓕ Other options
- AC100V: Ⓖ Voltage *4 *5

Symbol	Descriptions
Ⓐ Port size	
02	Rc1/4
03	Rc3/8
Ⓑ Orifice	
1	ø1.5
2	ø2
3	ø3
4	ø3.5
5	ø4
6	ø5
7	ø7

Ⓒ Body/sealant combination

		Body	Sealant	Treatment	Remarks		
C	Std.	Brass	PTFE	-	Air, water, kerosene, oil, steam (up to 181˚C)	●	●
F	Option	Stainless steel	PTFE			●	●
K		Brass	PTFE	Oil free		●	●
N		Stainless steel	PTFE			●	●

Refer to page 36 in the Introduction for details on the material combinations.

Ⓓ Type of coil		
4		Class H explosion proof coil d2G2
Ⓔ Junction box		
T	Std.	Conduit (G1/2)
L	Option	Pressure proof packing seal (G1/2) connection, cable OD ø7.5 to 8.4
M		Pressure proof packing seal (G1/2) connection, cable OD ø8.5 to 9.4
Ⓕ Other options		
Blank		No options
B		Mounting plate
Ⓖ Voltage		
AC100V		100 VAC 50/60 Hz, 110 VAC 60 Hz
AC200V		200 VAC 50/60 Hz, 220 VAC 60 Hz

<Example of model number>

AB41E2-02-4-C4TB-AC100V
Series: AB41E2

Ⓐ Port size : Rc1/4
Ⓑ Orifice : ø3.5
Ⓒ Body/sealant combination
: Body - brass, sealant - PTFE
Ⓓ Type of coil : Heat proof class H explosion proof coil d2G2
Ⓔ Junction box : Conduit (G1/2)
Ⓕ Other options : Mounting plate
Ⓖ Voltage : 100 VAC 50/60 Hz, 110 VAC 60 Hz

⚠ Note on model no. selection

*1: G and NPT threads are used for piping port.
Contact CKD for details.
*2: A pressure proof packing seal (G3/4) connection is also available. Contact CKD for more information.
Note that the conduit connection (G3/4) is not available.
*3: Tropicalization (rust-proof coating) is available as a measure against rust.
Contact CKD for more information.
*4: 100 VAC coil is compatible with 100 VAC 50/60 Hz and 110 VAC 60 Hz, and 200 VAC coil is compatible with 200 VAC 50/60 Hz and 220 VAC 60 Hz.
*5: Other voltages available are as follows. Contact CKD for more information.
12, 24, 48, 110, 115, 120, 220, 240, 380, 400 VAC

Internal structure and parts list

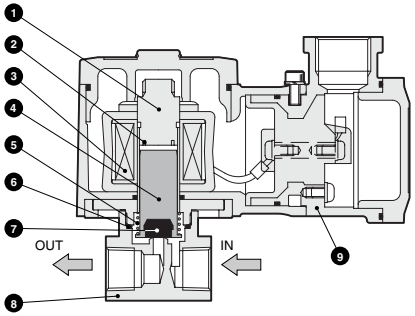

No.	Parts name	Material	
1	Core assembly	SUS405 or equivalent, 316L, 403	Stainless steel
2	Coil	——	——
3	Shading coil	Cu (Ag for stainless steel body)	Copper (silver for stainless steel body)
4	Plunger	SUS405 or equivalent	Stainless steel
5	Plunger spring	SUS304	Stainless steel
6	O ring	PTFE	Tetrafluoroethylene resin
7	Valve sealant	PTFE	Tetrafluoroethylene resin
8	Body	C3771 (SUS303)	Brass (stainless steel)
9	Coil case	ADC12	Aluminum die casting

( ) shows options.

Dimensions

CAD

● Conduit (G1/2) type
AB41E2-02/03-1 to 7-*4T

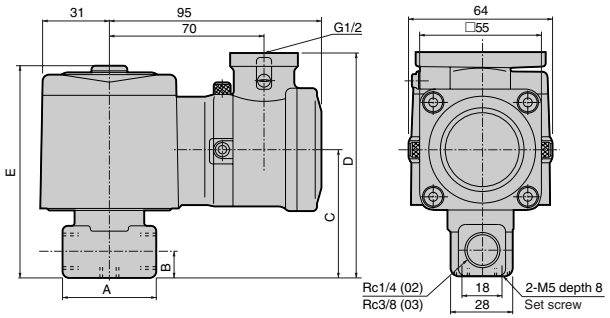

Model no.	A	B	C	D	E
AB41E2-02-1 to 6	36	11	54	97	92
AB41E2-02-7 AB41E2-03-1 to 7	40	12	57	100	95

Optional dimensions

● Stainless steel body
AB41E2-02/03-1 to 7- F, N

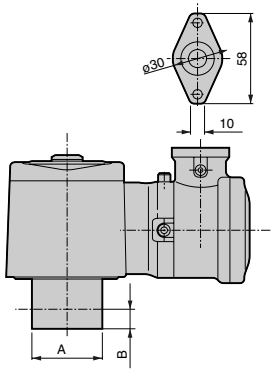

● Pressure proof packing seal (G1/2) connection type
AB41E2-02/03-1 to 7- L, M

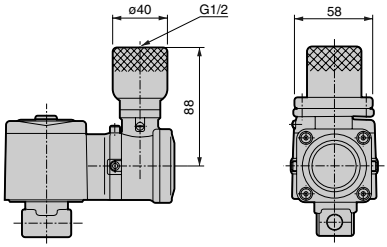

Model no.	A	B
AB41E2-02-1 to 6□	ø37.5	11
AB41E2-02-7□ **AB41E2-03-1 to 7□**	ø45	12

● Mounting plate
AB41E2-02/03-1 to 7-*** B / AB

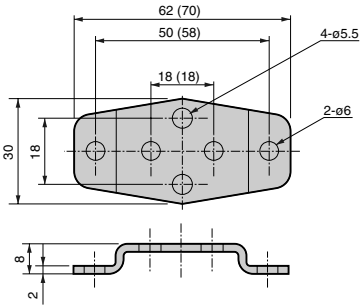

Dimensions shown in ( ) are for the mounting plate No. 2.

Code	Applicable model	
Mounting plate No. 1 GE-100106	● **AB41E2-$^{02}_{03}$-1 to 7**	**Brass body**
	● **AB41E2-02-1 to 6**	**Stainless steel body**
Mounting plate No. 2 GE-100159	● **AB41E2-02-7**	**Stainless steel body**
	● **AB41E2-03-1 to 7**	**Stainless steel body**

Explosion proof pilot operated 2 port solenoid valve
(general purpose valve)

AP11E2/AP12E2 Series

- Pressure and explosion proof structure d2G2 (flame-proof grade 2, ignitability G2)
- NC (normally closed) type, NO (normally open) type
- Port size: Rc1/2 to Rc1 ● Piston structure

RoHS CAD

JIS symbol

● AP11E2:
NC (normally closed) type

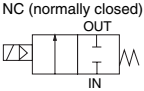

● AP12E2:
NO (normally open) type

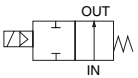

Common specifications

Item	AP11E2/AP12E2
Working fluid	Air, water, kerosene, oil (50 mm²/s or less), steam
Working pressure differential range MPa	0.05 to 1.2 (refer to max. working pressure differential in individual specifications.)
Max. working pressure MPa	2 (for fluid, 1 for steam)
Withstanding pressure (water) MPa	10
Fluid temperature °C	5 to 181
Ambient temperature °C	-10 to 40
Heat proof class	H
Atmosphere	Outdoors/flammable etc. (flame-proof grade 1 to 2, ignitability G1 to G2)
Valve structure	Pilot operated poppet, piston structure
Valve seat leakage (Note 1) cm³/min. (ANR)	300 or less (air)
Mounting attitude	Free (within working pressure differential range)

Note 1: For AP11E2 (NC (normally closed) type), these values apply to pneumatic pressure 0.05 to 1.2 MPa, and for AP12E2 (NO (normally open) type), these apply to pneumatic pressure 0.05 to 0.5 MPa

Individual specifications

Item / Model no.	Port size	Orifice (mm)	Min. working pressure diff. (MPa)	Max. working pressure diff. (MPa) Air AC	Water, kerosene AC	Oil (50 mm²/s) AC	Steam AC	Rated voltage	Apparent power (VA) Holding 50 Hz	Holding 60 Hz	Starting 50 Hz	Starting 60 Hz	Power consumption (W) AC 50 Hz	AC 60 Hz	Weight (kg)
NC (normally closed) type															
AP11E2-15A	Rc1/2	15	0.05	1.2	1.0	0.6	1.0	100 VAC 50/60 Hz 110 VAC 60 Hz 200 VAC 50/60 Hz 220 VAC 60 Hz	18	15	29	24	8	7	1.9
-20A	Rc3/4	20													2.3
-25A	Rc1	25													3.0
NO (normally open) type															
AP12E2-15A	Rc1/2	15	0.05	0.5	0.5	0.5	0.5	100 VAC 50/60 Hz 110 VAC 60 Hz 200 VAC 50/60 Hz 220 VAC 60 Hz	22	18	35	29	8.7	6.7	1.9
-20A	Rc3/4	20													2.3
-25A	Rc1	25													3.0

*1: Voltage fluctuation should be within -10 to +5% of the rated voltage.

Flow characteristics

Model no.	Port size	Orifice (mm)	Flow characteristics C [dm³/(s·bar)]	b	Cv flow factor	S (mm²)
NC (normally closed) type						
AP11E2-15A	Rc1/2	15	21	0.22	4.5	-
-20A	Rc3/4	20	-	-	9.3	162
-25A	Rc1	25	-	-	12.0	231
NO (normally open) type						
AP12E2-15A	Rc1/2	15	21	0.22	4.5	-
-20A	Rc3/4	20	-	-	9.3	162
-25A	Rc1	25	-	-	12.0	231

*1: Effective sectional area S and sonic conductance C are converted as S = 5.0 × C.

How to order

AP1①E2 - 15A - C 4 T - AC100V

Model no.

Ⓐ Actuation

Ⓑ Port size *2

Ⓒ Body/sealant combination

Ⓓ Type of coil

Ⓔ Junction box *3

Ⓕ Voltage *5 *6

Symbol	Descriptions	AP11E2	AP12E2
Ⓐ Actuation			
1	NC (normally closed) type	●	
2	NO (normally open) type		●
Ⓑ Port size			
15A	Rc1/2	●	●
20A	Rc3/4	●	●
25A	Rc1	●	●

Ⓒ Body/sealant combination

		Body	Valve sealant	O ring	Treatment	Remarks		
C	Std.	Bronze	PTFE	Fluoro rubber	-	Air, water, kerosene, oil, steam (up to 181˚C)	●	●
F	Option	Stainless steel	PTFE	Fluoro rubber			●	●
K		Bronze	PTFE	Fluoro rubber	Oil free		●	●
N		Stainless steel	PTFE	Fluoro rubber			●	●

Refer to page 36 in the Introduction for details on the material combinations.

Symbol	Descriptions	AP11E2	AP12E2
Ⓓ Type of coil			
4	Heat proof class H explosion proof coil d2G2	●	●
Ⓔ Junction box			
T (Std.)	Conduit (G1/2)	●	●
L (Option)	Pressure proof packing seal (G1/2) connection, cable OD ø7.5 to 8.4	●	●
M (Option)	Pressure proof packing seal (G1/2) connection, cable OD ø8.5 to 9.4	●	●
Ⓕ Voltage			
AC100V	100 VAC 50/60 Hz, 110 VAC 60 Hz	●	●
AC200V	200 VAC 50/60 Hz, 220 VAC 60 Hz	●	●

<Example of model number>

AP11E2-15A-C4T-AC100V
Series: AP11E2

Ⓐ Actuation : NC (normally closed) type
Ⓑ Port size : Rc1/2
Ⓒ Body/sealant combination
: Body - bronze, valve sealant - PTFE, O ring - fluoro rubber
Ⓓ Type of coil : Heat proof class H explosion proof coil d2G2
Ⓔ Junction box : Conduit (G1/2)
Ⓕ Voltage : 100 VAC 50/60 Hz, 110 VAC 60 Hz

⚠ Note on model no. selection

*1: The combinations indicated with ● in the above table are available.
*2: G and NPT threads are used for piping port. Contact CKD for details.
*3: A pressure proof packing seal (G3/4) connection is also available. Contact CKD for more information. Note that the conduit connection (G3/4) is not available.
*4: Tropicalization (rust-proof coating) is available as a measure against rust. Contact CKD for more information.
*5: 100 VAC coil is compatible with 100 VAC 50/60 Hz and 110 VAC 60 Hz, and 200 VAC coil is compatible with 200 VAC 50/60 Hz and 220 VAC 60 Hz.
*6: Other voltages available are as follows. Contact CKD for more information. 12, 24, 48, 110, 115, 120, 220, 240, 380, 400 VAC

Internal structure and parts list

● AP11E2 Series

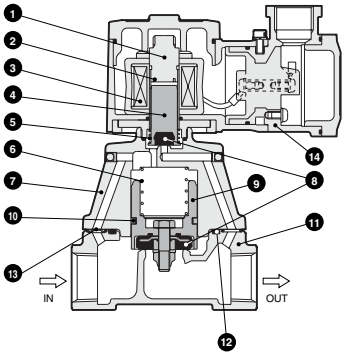

No.	Parts name	Material	
1	Core assembly	SUS405 or equivalent, SUS316L, SUS403	Stainless steel
2	Shading coil	Cu (Ag for stainless steel body)	Copper (silver for stainless steel body)
3	Coil	——	——
4	Plunger	SUS405 or equivalent	Stainless steel
5	Plunger spring	SUS304	Stainless steel
6	Valve spring	SUS304	Stainless steel
7	Stuffing	CAC408 (SCS13)	Bronze casting (stainless steel casting)
8	Valve sealant	PTFE	Tetrafluoroethylene resin
9	Main valve assembly	C3604, SUS303, SUS304 (SUS303, SUS304)	Stainless steel, brass (stainless steel)
10	Piston ring	SUS304, PTFE	Stainless steel, tetrafluoroethylene resin
11	Body	CAC408 (SCS13)	Bronze casting (stainless steel casting)
12	O ring	FKM	Fluoro rubber
13	Orifice plate	SUS304 (SUS303)	Stainless steel
14	Coil case	ADC12	Aluminum die casting

( ) shows options.

● AP12E2 Series

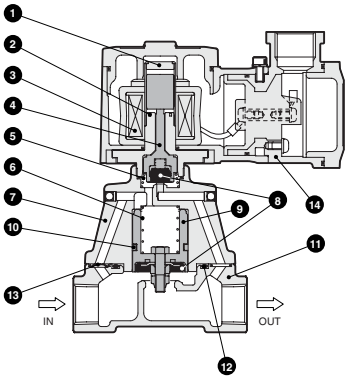

No.	Parts name	Material	
1	Plunger/core assembly	SUS405 or equivalent, SUS316L, SUS304	Stainless steel
2	Shading coil	Cu (Ag for stainless steel body)	Copper (silver for stainless steel body)
3	Coil	——	——
4	NO valve	POM, NBR (SUS303, PFA)	Acetal resin, nitrile rubber (stainless steel, perfluoroalkoxy resin)
5	Spring	SUS304	Stainless steel
6	Valve spring	SUS304	Stainless steel
7	Stuffing	CAC408 (SCS13)	Bronze casting (stainless steel casting)
8	Valve sealant	PTFE	Tetrafluoroethylene resin
9	Main valve assembly	C3604, SUS303, SUS304 (SUS303, SUS304)	Stainless steel, brass (stainless steel)
10	Piston ring	SUS304, PTFE	Stainless steel, tetrafluoroethylene resin
11	Body	CAC408 (SCS13)	Bronze casting (stainless steel casting)
12	O ring	FKM	Fluoro rubber
13	Orifice plate	SUS304 (SUS303)	Stainless steel
14	Coil case	ADC12	Aluminum die casting

( ) shows options.

Dimensions

● Conduit (G1/2) type
AP11E2
AP12E2 -15A/20A/25A-*4T

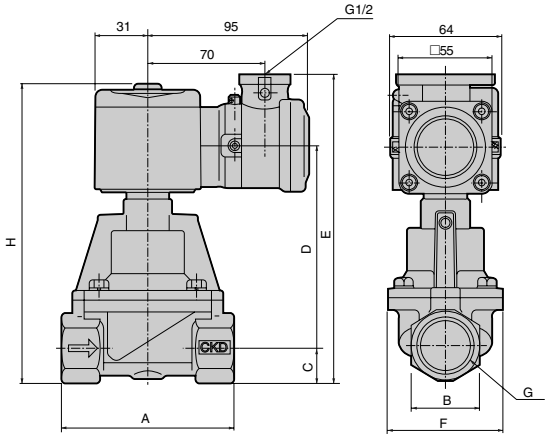

Model no.	A	B	C	D	E	F	G	H
AP11E2-15A-*4T	90	29	14.5	94.5	152	57	Rc1/2	147
AP11E2-20A-*4T	100	35	17.5	103.5	164	65	Rc3/4	159
AP11E2-25A-*4T	110	44	22.0	118	183	76	Rc1	178
AP12E2-15A-*4T	90	29	14.5	98.5	156	57	Rc1/2	151
AP12E2-20A-*4T	100	35	17.5	107.5	168	65	Rc3/4	163
AP12E2-25A-*4T	110	44	22.0	122	187	76	Rc1	182

Optional dimensions

● Pressure proof packing seal (G1/2) connection type
AP11E2
AP12E2 -15A/20A/25A-** L, M

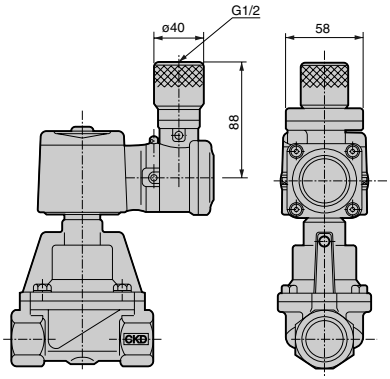

Explosion proof pilot operated 2 port solenoid valve
(general purpose valve)

AP21E2/AP22E2 Series

- Pressure and explosion proof structure d2G2 (flame-proof grade 2, ignitability G2)
- NC (normally closed) type, NO (normally open) type
- Port size: Rc1 1/4 to Rc2, 32 to 50 flange ● Piston structure RoHS CAD

JIS symbol

● AP21E2:
NC (normally closed) type

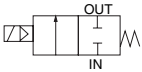

● AP22E2:
NO (normally open) type

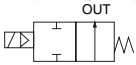

Common specifications

Item	AP21E2/AP22E2
Working fluid	Air, water, kerosene, oil (50 mm²/s or less), steam
Working pressure differential range MPa	0.05 to 1.2 (refer to max. working pressure differential in individual specifications.)
Max. working pressure MPa	1.6 (for fluid, 1 for steam)
Withstanding pressure (water) MPa	3.2
Fluid temperature ˚C	5 to 181
Ambient temperature ˚C	-10 to 40
Heat proof class	H
Atmosphere	Outdoors/flammable etc. (flame-proof grade 1 to 2, ignitability G1 to G2)
Valve structure	Pilot operated poppet, piston structure
Valve seat leakage (Note 1) cm³/min. (ANR)	400 or less (air)
Mounting attitude	Free (within working pressure differential range)

Note 1: For AP21E2 (NC (normally closed) type), these values apply to pneumatic pressure 0.05 to 1.2 MPa, and for AP22E2 (NO (normally open) type), these apply to pneumatic pressure 0.05 to 0.5 MPa.

Individual specifications

Item / Model no.	Port size	Orifice (mm)	Min. working pressure diff. (MPa)	Max. working pressure diff. (MPa) Air AC	Water, kerosene AC	Oil (50 mm²/s) AC	Steam AC	Rated voltage	Apparent power (VA) Holding 50 Hz	Holding 60 Hz	Starting 50 Hz	Starting 60 Hz	Power consumption (W) AC 50 Hz	AC 60 Hz	Weight (kg)
NC (normally closed) type															
AP21E2-32A	Rc1 1/4	35	0.05	1.2	1.0	0.6	1.0	100 VAC 50/60 Hz 110 VAC 60 Hz 200 VAC 50/60 Hz 220 VAC 60 Hz	18	15	29	24	8	7	4.0
-32F	32 flange														7.5
-40A	Rc1 1/2	43													5.0
-40F	40 flange														8.5
-50A	Rc2	53													6.5
-50F	50 flange														10.5
NO (normally open) type															
AP22E2-32A	Rc1 1/4	35	0.05	0.5	0.5	0.5	0.5	100 VAC 50/60 Hz 110 VAC 60 Hz 200 VAC 50/60 Hz 220 VAC 60 Hz	22	18	35	29	8.7	6.7	4.0
-32F	32 flange														7.5
-40A	Rc1 1/2	43													5.0
-40F	40 flange														8.5
-50A	Rc2	53													6.5
-50F	50 flange														10.5

*1: The model numbers above are for the standard type. Refer to How to order for other combinations.
*2: Voltage fluctuation should be within -10 to +5% of the rated voltage.

Flow characteristics

Model no.	Port size	Orifice (mm)	Cv flow factor	Effective sectional area (mm^2)
NC (normally closed) type				
AP21E2-32A	Rc1 1/4	35	25	460
AP21E4-32F	32 flange			
AP21E4-40A	Rc1 1/2	43	34	625
AP21E4-40F	40 flange			
AP21E4-50A	Rc2	53	53	975
AP21E4-50F	50 flange			
NO (normally open) type				
AP22E2-32A	Rc1 1/4	35	25	460
AP22E4-32F	32 flange			
AP22E4-40A	Rc1 1/2	43	34	625
AP22E4-40F	40 flange			
AP22E4-50A	Rc2	53	53	975
AP22E4-50F	50 flange			

How to order

AP2①E2 - 32F - C 4 T - AC100V

- Model no.
- Ⓐ Actuation
- Ⓑ Port size *2 *3
- Ⓒ Body/sealant combination
- Ⓓ Type of coil
- Ⓔ Junction box *4
- Ⓕ Voltage *6 *7

Symbol	Descriptions	AP21E2	AP22E2
Ⓐ Actuation			
1	NC (normally closed) type	●	
2	NO (normally open) type		●
Ⓑ Port size			
32A	Rc1 1/4	●	●
32F	32 flange	●	●
40A	Rc1 1/2	●	●
40F	40 flange	●	●
50A	Rc2	●	●
50F	50 flange	●	●

Ⓒ Body/sealant combination

		Body	Valve sealant	O ring	Treatment	Remarks		
C	Std.	Bronze	PTFE	Fluoro rubber	-	Air, water, kerosene, oil, steam (up to 181˚C)	●	●
F		Stainless steel	PTFE	Fluoro rubber			●	●
K	Option	Bronze	PTFE	Fluoro rubber	Oil free		●	●
N		Stainless steel	PTFE	Fluoro rubber			●	●

Refer to page 36 in the Introduction for details on the material combinations.

Ⓓ Type of coil				
4		Heat proof class H explosion proof coil d2G2	●	●
Ⓔ Junction box				
T	Std.	Conduit (G1/2)	●	●
L	Option	Pressure proof packing seal (G1/2) connection, cable OD ø7.5 to 8.4	●	●
M		Pressure proof packing seal (G1/2) connection, cable OD ø8.5 to 9.4	●	●
Ⓕ Voltage				
AC100V		100 VAC 50/60 Hz, 110 VAC 60 Hz	●	●
AC200V		200 VAC 50/60 Hz, 220 VAC 60 Hz	●	●

<Example of model number>

AP21E2-32F-C4T-AC100V
Series: AP21E2

Ⓐ Actuation : NC (normally closed) type
Ⓑ Port size : 32 flange
Ⓒ Body/sealant combination
: Body - bronze, valve sealant - PTFE, O ring - fluoro rubber
Ⓓ Type of coil : Heat proof class H explosion proof coil d2G2
Ⓔ Junction box : Conduit (G1/2)
Ⓕ Voltage : 100 VAC 50/60 Hz, 110 VAC 60 Hz

⚠ Note on model no. selection

*1: The combinations indicated with ● in the above table are available.
*2: The companion flange is JIS B2210 10K.
(No flange is enclosed with the product, but must be purchased separately.)
*3: G and NPT threads are used for piping port. Contact CKD for details.
*4: A pressure proof packing seal (G3/4) connection is also available. Contact CKD for more information.
Note that the conduit connection (G3/4) is not available.
*5: Tropicalization (rust-proof coating) is available as a measure against rust.
Contact CKD for more information.
*6: 100 VAC coil is compatible with 100 VAC 50/60 Hz and 110 VAC 60 Hz, and 200 VAC coil is compatible with 200 VAC 50/60 Hz and 220 VAC 60 Hz.
*7: Other voltages available are as follows. Contact CKD for more information.
12, 24, 48, 110, 115, 120, 220, 240, 380, 400 VAC

Internal structure and parts list

● AP21E2 Series

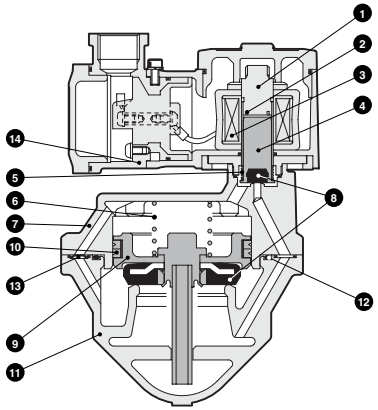

No.	Parts name	Material	
1	Core assembly	SUS405 or equivalent, SUS316L, SUS403	Stainless steel
2	Shading coil	Cu (Ag for stainless steel body)	Copper (silver for stainless steel body)
3	Coil	——	——
4	Plunger	SUS405 or equivalent	Stainless steel
5	Plunger spring	SUS304	Stainless steel
6	Valve spring	SUS304	Stainless steel
7	Stuffing	CAC408 (SCS13)	Bronze casting (stainless steel casting)
8	Valve sealant	PTFE	Tetrafluoroethylene resin
9	Main valve assembly	C3604, SUS303, SUS304 (SUS303, SUS304)	Stainless steel, brass (stainless steel)
10	Seal ring set	SUS304, PTFE	Stainless steel, tetrafluoroethylene resin
11	Body	CAC408 (SCS13)	Bronze casting (stainless steel casting)
12	O ring	FKM	Fluoro rubber
13	Orifice plate	SUS304	Stainless steel
14	Coil case	ADC12	Aluminum die casting

( ) shows options.

● AP22E2 Series

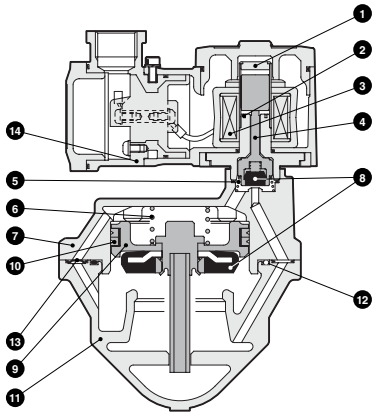

No.	Parts name	Material	
1	Plunger/core assembly	SUS405 or equivalent, SUS316L, SUS304	Stainless steel
2	Shading coil	Cu (Ag for stainless steel body)	Copper (silver for stainless steel body)
3	Coil	——	——
4	NO valve	POM, NBR (SUS303, PFA)	Acetal resin, nitrile rubber (stainless steel, perfluoroalkoxy resin)
5	Spring	SUS304	Stainless steel
6	Valve spring	SUS304	Stainless steel
7	Stuffing	CAC408 (SCS13)	Bronze casting (stainless steel casting)
8	Valve sealant	PTFE	Tetrafluoroethylene resin
9	Main valve assembly	C3604, SUS303, SUS304 (SUS303, SUS304)	Stainless steel, brass (stainless steel)
10	Seal ring set	SUS304, PTFE	Stainless steel, tetrafluoroethylene resin
11	Body	CAC408 (SCS13)	Bronze casting (stainless steel casting)
12	O ring	FKM	Fluoro rubber
13	Orifice plate	SUS304	Stainless steel
14	Coil case	ADC12	Aluminum die casting

( ) shows options.

Dimensions

● Conduit (G1/2) type (Rc screw-in type)
AP21E2
AP22E2 -32A/40A/50A-*4T

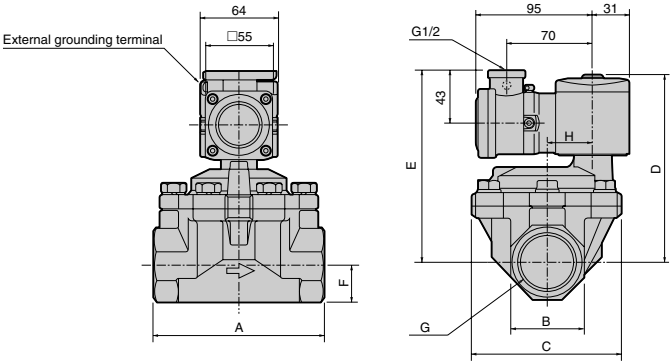

Model no.	A	B	C	D	E	F	G	H
AP21E2-32A-*4T	125	54	112	147	152	27	Rc1 1/4	32
AP21E2-40A-*4T	140	60	122	153	158	30	Rc1 1/2	38
AP21E2-50A-*4T	160	74	132	161	166	37	Rc2	45
AP22E2-32A-*4T	125	54	112	151	156	27	Rc1 1/4	32
AP22E2-40A-*4T	140	60	122	157	162	30	Rc1 1/2	38
AP22E2-50A-*4T	160	74	132	165	170	37	Rc2	45

● Conduit (G1/2) type (flange type)
AP21E2
AP22E2 -32F/40F/50F-*4T

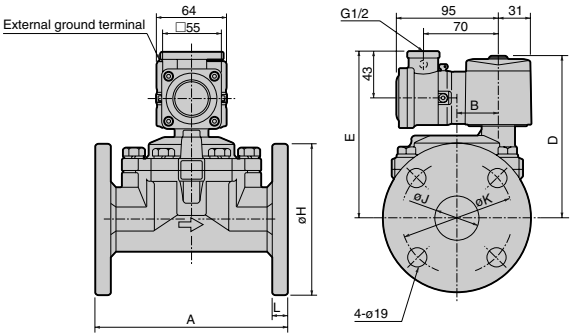

Model no.	A	B	D	E	H	J	K	L
AP21E2-32F-*4T	170	32	147	152	135	36	100	12
AP21E2-40F-*4T	180	38	153	158	140	42	105	14
AP21E2-50F-*4T	180	45	161	166	155	53	120	14
AP22E2-32F-*4T	170	32	151	156	135	36	100	12
AP22E2-40F-*4T	180	38	157	162	140	42	105	14
AP22E2-50F-*4T	180	45	165	170	155	53	120	14

Optional dimensions

● Pressure proof packing seal (G1/2) connection type (Rc screw-in type)

AP21E2
AP22E2 -32A/40A/50A-** L, M / N, P

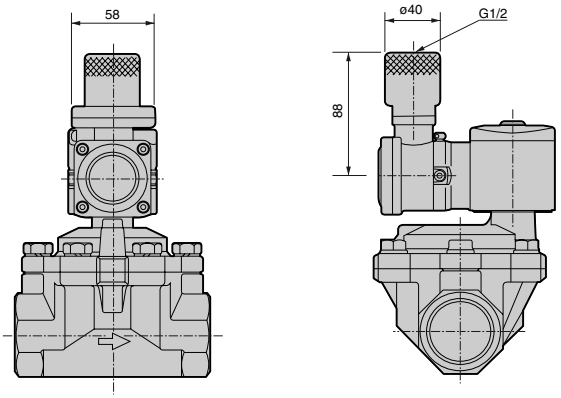

● Pressure proof packing seal (G1/2) connection type (flange type)

AP21E2
AP22E2 -32F/40F/50F-** L, M

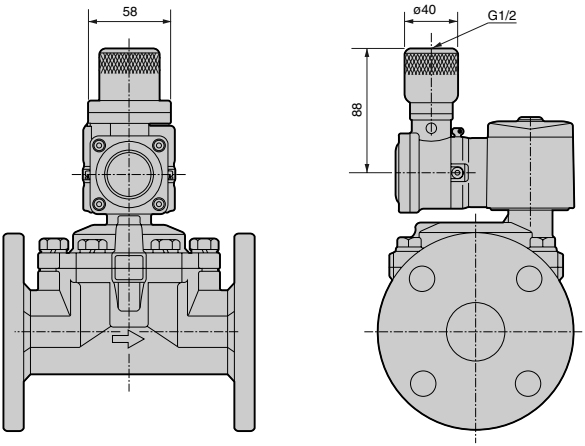

Electronic catalog file list

Explosion proof general purpose 2, 3 port solenoid valve (general purpose valve)

Direct acting 2 port valve AB4*E (d2G4/d2G2)

Electronic Catalog file list is applied to "CAD DATA 2006".

Model no.	DXF		MICRO CADAM
	Folder name	Filename	Filename (GROUP: CAD, USER: STDLIB)
● AB41E4/42E4: page 364, AB41E2: pages 396 to 397			
AB41E*-1/4	AB_E	ab41e__1_4	CKD-AB41E*-1/4
AB41E*-1/4 3/8		ab41e__1_4_3_8	CKD-AB41E*-1/4 3/8
AB41E*-A-1/4		ab41e__a_1_4	CKD-AB41E*-A-1/4
AB41E*-A-1/4 3/8		ab41e__a_1_4_3_8	CKD-AB41E*-A-1/4 3/8
AB42E4-1/4		ab42e4_1_4	CKD-AB42E4-1/4
AB42E4-1/4 3/8		ab42e4_1_4_3_8	CKD-AB42E4-1/4 3/8
Accessory (mounting plate, manual mounting plate)		a_e_f	CKD-A*E-F

Direct acting 3 port valve AG4*E (d2G4)

Model no.	DXF		MICRO CADAM
	Folder name	Filename	Filename (GROUP: CAD, USER: STDLIB)
● AG41E4/43E4/44E4: page 369			
AG4*E4-1/4	AG_E	ag4_e4_1_4	CKD-AG4*E4-1/4
AG4*E4-3/8		ag4_e4_3_8	CKD-AG4*E4-3/8
AG4*E4-A-1/4		ag4_e4_a_1_4	CKD-AG4*E4-A-1/4
AG4*E4-A-3/8		ag4_e4_a_3_8	CKD-AG4*E4-A-3/8
Accessory (mounting plate, manual mounting plate)		a_e_f	CKD-A*E-F

Electronic catalog file list

Pilot operated 2 port valve piston structure (d2G4/d2G2)

Electronic Catalog file list is applied to "CAD DATA 2006".

Model no.	DXF		MICRO CADAM
	Folder name	Filename	Filename (GROUP: CAD, USER: STDLIB)
● AP11E4/12E4: page 373, AP11E2/12E2: page 401			
AP11E*-15A	AP1_E	ap11e__15a	CKD-AP11E*-15A
AP11E*-20A		ap11e__20a	CKD-AP11E*-20A
AP11E*-25A		ap11e__ 25a	CKD-AP11E*-25A
AP11E*-32A		ap11e__32a	CKD-AP11E*-32A
AP11E*-32F		ap11e__32f	CKD-AP11E*-32F
AP11E*-40A		ap11e__40a	CKD-AP11E*-40A
AP11E*-40F		ap11e__40f	CKD-AP11E*-40F
AP11E*-50A		ap11e__50a	CKD-AP11E*-50A
AP11E*-50F		ap11e__50f	CKD-AP11E*-50F
AP11E*-15A-A		ap11e__15a_a	CKD-AP11E*-15A-A
AP11E*-20A-A		ap11e__20a_a	CKD-AP11E*-20A-A
AP11E*-25A-A		ap11e__25a_a	CKD-AP11E*-25A-A
AP11E*-32A-A		ap11e__32a_a	CKD-AP11E*-32A-A
AP11E*-32F-A		ap11e__32f_a	CKD-AP11E*-32F-A
AP11E*-40A-A		ap11e__40a_a	CKD-AP11E*-40A-A
AP11E*-40F-A		ap11e__40f_a	CKD-AP11E*-40F-A
AP11E*-50A-A		ap11e__50a_a	CKD-AP11E*-50A-A
AP11E*-50F-A		ap11e__50f_a	CKD-AP11E*-50F-A
AP12E*-15A		ap12e__15a	CKD-AP12E*-15A
AP12E*-20A		ap12e__20a	CKD-AP12E*-20A
AP12E*-25A		ap12e__25a	CKD-AP12E*-25A
AP12E*-32A		ap12e__32a	CKD-AP12E*-32A
AP12E*-32F		ap12e__32f	CKD-AP12E*-32F
AP12E*-40A		ap12e__40a	CKD-AP12E*-40A
AP12E*-40F		ap12e__40f	CKD-AP12E*-40F
AP12E*-50A		ap12e__50a	CKD-AP12E*-50A
AP12E*-50F		ap12e__50f	CKD-AP12E*-50F
Accessory (mounting plate, manual mounting plate)		a_e_f	CKD-A*E-F
● AP21E4/22E4: pages 378 to 379, AP21E2/22E2: pages 406 to 407			
AP21E*-32A	AP2_E	ap21e__32a	CKD-AP21E*-32A
AP21E*-32F		ap21e__32f	CKD-AP21E*-32F
AP21E*-40A		ap21e__40a	CKD-AP21E*-40A
AP21E*-40F		ap21e__40f	CKD-AP21E*-40F
AP21E*-50A		ap21e__50a	CKD-AP21E*-50A
AP21E*-50F		ap21e__50f	CKD-AP21E*-50F
AP21E*-32A-A		ap21e__32a_a	CKD-AP21E*-32A-A
AP21E*-32F-A		ap21e__32f_a	CKD-AP21E*-32F-A
AP21E*-40A-A		ap21e__40a_a	CKD-AP21E*-40A-A
AP21E*-40F-A		ap21e__40f_a	CKD-AP21E*-40F-A
AP21E*-50A-A		ap21e__50a_a	CKD-AP21E*-50A-A
AP21E*-50F-A		ap21e__50f_a	CKD-AP21E*-50F-A
AP22E*-32A		ap22e__32a	CKD-AP22E*-32A
AP22E*-32F		ap22e__32f	CKD-AP22E*-32F
AP22E*-40A		ap22e__40a	CKD-AP22E*-40A
AP22E*-40F		ap22e__40f	CKD-AP22E*-40F
AP22E*-50A		ap22e__50a	CKD-AP22E*-50A
AP22E*-50F		ap22e__50f	CKD-AP22E*-50F
Accessory (mounting plate, manual mounting plate)		a_e_f	CKD-A*E-F

Electronic catalog file list

Pilot operated 2 port valve diaphragm structure

Electronic Catalog file list is applied to "CAD DATA 2006".

Model no.	DXF		MICRO CADAM
	Folder name	Filename	Filename (GROUP: CAD, USER: STDLIB)
● AD11E4/12E4: page 383			
AD11E4-15A	AD1_E	ad11e4_15a	CKD-AD11E4-15A
AD11E4-20A		ad11e4_20a	CKD-AD11E4-20A
AD11E4-25A		ad11e4_25a	CKD-AD11E4-25A
AD11E4-32A		ad11e4_32a	CKD-AD11E4-32A
AD11E4-32F		ad11e4_32f	CKD-AD11E4-32F
AD11E4-40A		ad11e4_40a	CKD-AD11E4-40A
AD11E4-40F		ad11e4_40f	CKD-AD11E4-40F
AD11E4-50A		ad11e4_50a	CKD-AD11E4-50A
AD11E4-50F		ad11e4_50f	CKD-AD11E4-50F
AD11E4-15A-A		ad11e4_15a_a	CKD-AD11E4-15A-A
AD11E4-20A-A		ad11e4_20a_a	CKD-AD11E4-20A-A
AD11E4-25A-A		ad11e4_25a_a	CKD-AD11E4-25A-A
AD11E4-32A-A		ad11e4_32a_a	CKD-AD11E4-32A-A
AD11E4-32F-A		ad11e4_32f_a	CKD-AD11E4-32F-A
AD11E4-40A-A		ad11e4_40a_a	CKD-AD11E4-40A-A
AD11E4-40F-A		ad11e4_40f_a	CKD-AD11E4-40F-A
AD11E4-50A-A		ad11e4_50a_a	CKD-AD11E4-50A-A
AD11E4-50F-A		ad11e4_50f_a	CKD-AD11E4-50F-A
AD12E4-15A		ad12e4_15a	CKD-AD12E4-15A
AD12E4-20A		ad12e4_20a	CKD-AD12E4-20A
AD12E4-25A		ad12e4_25a	CKD-AD12E4-25A
AD12E4-32A		ad12e4_32a	CKD-AD12E4-32A
AD12E4-32F		ad12e4_32f	CKD-AD12E4-32F
AD12E4-40A		ad12e4_40a	CKD-AD12E4-40A
AD12E4-40F		ad12e4_40f	CKD-AD12E4-40F
AD12E4-50A		ad12e4_50a	CKD-AD12E4-50A
AD12E4-50F		ad12e4_50f	CKD-AD12E4-50F
Accessory (mounting plate, manual mounting plate)		a_e_f	CKD-A*E-F
● AD21E4/22E4: pages 388 to 389			
AD21E4-32A	AD2_E	ad21e4_32a	CKD-AD21E4-32A
AD21E4-32F		ad21e4_32f	CKD-AD21E4-32F
AD21E4-40A		ad21e4_40a	CKD-AD21E4-40A
AD21E4-40F		ad21e4_40f	CKD-AD21E4-40F
AD21E4-50A		ad21e4_50a	CKD-AD21E4-50A
AD21E4-50F		ad21e4_50f	CKD-AD21E4-50F
AD21E4-32A-A		ad21e4_32a_a	CKD-AD21E4-32A-A
AD21E4-32F-A		ad21e4_32f_a	CKD-AD21E4-32F-A
AD21E4-40A-A		ad21e4_40a_a	CKD-AD21E4-40A-A
AD21E4-40F-A		ad21e4_40f_a	CKD-AD21E4-40F-A
AD21E4-50A-A		ad21e4_50a_a	CKD-AD21E4-50A-A
AD21E4-50F-A		ad21e4_50f_a	CKD-AD21E4-50F-A
AD22E4-32A		ad22e4_32a	CKD-AD22E4-32A
AD22E4-32F		ad22e4_32f	CKD-AD22E4-32F
AD22E4-40A		ad22e4_40a	CKD-AD22E4-40A
AD22E4-40F		ad22e4_40f	CKD-AD22E4-40F
AD22E4-50A		ad22e4_50a	CKD-AD22E4-50A
AD22E4-50F		ad22e4_50f	CKD-AD22E4-50F
Accessory (mounting plate, manual mounting plate)		a_e_f	CKD-A*E-F

Electronic catalog file list

Pilot kick type 2 port solenoid valve diaphragm structure (d2G4)

Electronic Catalog file list is applied to "CAD DATA 2006".

Model no.	DXF		MICRO CADAM
	Folder name	Filename	Filename (GROUP: CAD, USER: STDLIB)
● ADK11E4/12E4: page 393			
ADK11E4-15A	ADK_E	adk11e4_15a	CKD-ADK11E4-15A
ADK11E4-20A		adk11e4_20a	CKD-ADK11E4-20A
ADK11E4-25A		adk11e4_25a	CKD-ADK11E4-25A
ADK12E4-15A		adk12e4_15a	CKD-ADK12E4-15A
ADK12E4-20A		adk12e4_20a	CKD-ADK12E4-20A
ADK12E4-25A		adk12e4_25a	CKD-ADK12E4-25A
Accessory (mounting plate, manual mounting plate)		a_e_f	CKD-A*E-F

AB*E4/E2/AG*E4/E2/AP*E4/E2 AD*E4/ADK*E4

(General purpose valve)

Explosion proof general purpose 2, 3 port solenoid valve

■ For air, water, oil (kerosene,light oil), stream

Overview

CKD explosion proof general purpose valve

Explosions can cause major disasters and lead to instant human fatalities. At the same time, explosions can cause extensive property damage to devices and equipment. Electrical and mechanical devices used in hazardous places are subject to the Occupational Safety and Health Act. Manufacture and use of these products are prohibited unless approved by the Minister of Health, Labour and Welfare or its agencies.

Under the motto "Respecting human life and maintaining corporate activities", CKD has researched and developed the explosion proof general purpose valves to assist in automation and energy conservation at hazardous places. Research, design, material selection, processing and inspection processes which are connected with a strong tie of "safety" are carried out with the most detailed attention. These CKD explosion proof general purpose valves constantly monitor hazardous places and ensure safety.

CONTENTS

Series variation 356

⚠ Safety precautions 358

Pressure and explosion proof structure d2G4

Direct acting

- AB41E4/42E4 (2 port) NC (normally closed) type / NO (normally open) type 360
- AG41E4/43E4/44E4 (3 port) Universal / NC pressurization / NO pressurization type 366

Pilot operated 2 port solenoid valve, piston structure

- AP11E4/12E4 NC (normally closed) type / NO (normally open) type 370
- AP21E4/22E4 NC (normally closed) type / NO (normally open) type 374

Pilot operated 2 port solenoid valve, diaphragm structure

- AD11E4/12E4 NC (normally closed) type / NO (normally open) type 380
- AD21E4/22E4 NC (normally closed) type / NO (normally open) type 384

Pilot kick type 2 port solenoid valve, diaphragm structure

- ADK11E4/12E4 NC (normally closed) type / NO (normally open) type 390

Pressure and explosion proof structure d2G2

Direct acting 2 port solenoid valve

- AB41E2 NC (normally closed) type 394

Pilot operated 2 port solenoid valve, piston structure

- AP11E2/12E2 NC (normally closed) type / NO (normally open) type 398
- AP21E2/22E2 NC (normally closed) type / NO (normally open) type 402

CAD Electronic Catalog file list 408

⚠ Always read the precautions in the Introduction and page 358 before starting use.

Series variation

Explosion proof general purpose direct acting, pilot operated 2, 3 port solenoid valve (explosion proof general purpose valve)

Explosion proof	No. of port	Model		Structure	Actuation	Working fluid: Air	Low vacuum	Water	Kerosene	Oil (50 mm²/s or less)	Steam
d2G4	2 port		AB41E4	Direct acting	NC (normally closed) type	●	●	●	●	●	
			AB42E4		NO (normally open) type	●	●	●	●	●	
	3 port		AG41E4	Direct acting	Universal type	●	●	●	●	●	
			AG43E4		NC pressurization type	●	●	●	●	●	
			AG44E4		NO pressurization type	●	●	●	●	●	
	2 port		AP11E4 *1	Pilot operated Piston structure	NC (normally closed) type	●		●	●	●	
			AP12E4 *1		NO (normally open) type	●		●	●	●	
			AP21E4		NC (normally closed) type	●		●	●	●	
			AP22E4		NO (normally open) type	●		●	●	●	
			AD11E4 *1	Pilot operated Diaphragm structure	NC (normally closed) type	●		●	●	●	
			AD12E4 *1		NO (normally open) type	●		●	●	●	
			AD21E4		NC (normally closed) type	●		●	●	●	
			AD22E4		NO (normally open) type	●		●	●	●	
			ADK11E4	Pilot operated	NC (normally closed) type	●	●	●	●	●	
			ADK12E4	Diaphragm kick type	NO (normally open) type	●	●	●	●	●	
d2G2	2 port		AB41E2	Direct acting	NC (normally closed) type	●		●	●	●	●
			AP11E2 *1	Pilot operated Piston structure	NC (normally closed) type	●		●	●	●	●
			AP12E2 *1		NO (normally open) type	●		●	●	●	●
			AP21E2		NC (normally closed) type	●		●	●	●	●
			AP22E2		NO (normally open) type	●		●	●	●	●

● Explosion proof specifications

Explosion proof structure	Electromagnet model no.	Certification number	Port	Coil type	Ambient temperature	Fluid temperature	Applicable solenoid valve
d2G4	EB21-G	No. T64349	2	B	-10 to 50˚C	-10 to 60˚C	● Direct acting (AB41E4 Series) ● Pilot operated Piston structure (AP11E4 Series) Diaphragm structure (AD11E4 Series)
	EB31-G	No. T64346	3				● Direct acting (AG41E4 Series) ● Direct acting (AG43E4 Series) ● Direct acting (AG44E4 Series)
	EB22-G	No. T64352	2				● Direct acting (AB42E4 Series) ● Pilot operated Piston structure (AP12E4/AP22E4 Series) Diaphragm structure (AD12E4/AD22E4 Series)
	EB23-G	No. T64355					● Diaphragm kick type (ADK11E4 Series)
	EB24-G	No. T64358					● Diaphragm kick type (ADK12E4 Series)
d2G2	EH21-G	No. T64351	2	H	-10 to 40˚C	5 to 181˚C	● Direct acting (AB41E2 Series) ● Pilot operated (AP11E2/AP21E2 Series)
	EH22-G	No. T64354					● Pilot operated (AP12E2/AP22E2 Series)

* Other specifications include products which can be used at an ambient temperature of 60˚C and fluid temperature of 70˚C. Contact CKD for more information.

	Port size											Page
	Rc1/4	Rc3/8	Rc1/2	Rc3/4	Rc1	Rc1 1/4	32 flange	Rc1 1/2	40 flange	Rc2	50 flange	
	●	●										360
	●	●										360
	●	●										366
	●	●										366
	●	●										366
			●	●	●							370
			●	●	●							370
						●	●	●	●	●	●	374
						●	●	●	●	●	●	374
			●	●	●							380
			●	●	●							380
						●	●	●	●	●	●	384
						●	●	●	●	●	●	384
			●	●	●							390
			●	●	●							390
	●	●										394
			●	●	●							398
			●	●	●							398
						●	●	●	●	●	●	402
						●	●	●	●	●	●	402

Safety precautions

Always read this section before starting use.

Explosion proof type direct acting, pilot operated 2, 3 port solenoid valve

Design & Selection

CAUTION

1 Selection standards

Thoroughly read and comprehend the section "Standards and approved parts" (pages 59 to 60 in the Introduction) for the selection standards for the explosion proof solenoid valve.

Installation, Piping & Wiring

CAUTION

1 Wiring

(1) Refer to the following drawing when wiring.

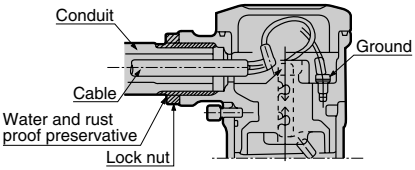

<For conduit thread>

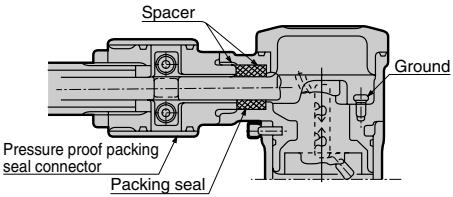

<For pressure proof packing seal>

(2) A terminal box rotates 270˚. The orientation can be changed by loosening the non-rotating bolt. After wiring and setting the wiring direction, tighten the non-rotating bolt with a torque of 0.6 to 0.8N·m to fix the terminal box. If the non-rotating bolt is loose, the terminal box could fall off during use. If the terminal box rotates, the rotating section could be damaged, or the internal wires could break. When laying the electric wires, do not loosen any bolts other than the four terminal box cap bolts and non-rotating bolt. Otherwise, the explosion-proof performance will not be guaranteed.

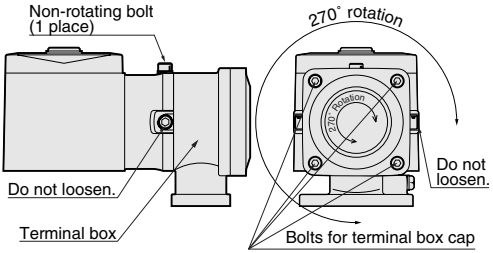

(3) Insert a fuse (1A), etc., in the electric circuit.

Maintenance

CAUTION

1 Maintenance of coil case section

If the coil case section, which has a pressure and explosion proof structure, must be disassembled when inspecting, consult with CKD.

For precautions other than above, refer to the precautions given in pages 124, 226 and 227 for the basic solenoid valves (direct acting general purpose valve, pilot operated general purpose valve and pilot kick type general purpose valve).