# AB*E4/E2/AG*E4/E2/AP*E4/E2 AD*E4/ADK*E4

(General purpose valve)

## Explosion proof general purpose 2, 3 port solenoid valve

■ For air, water, oil (kerosene,light oil), stream

### Overview

**CKD explosion proof general purpose valve**

Explosions can cause major disasters and lead to instant human fatalities. At the same time, explosions can cause extensive property damage to devices and equipment. Electrical and mechanical devices used in hazardous places are subject to the Occupational Safety and Health Act. Manufacture and use of these products are prohibited unless approved by the Minister of Health, Labour and Welfare or its agencies.

Under the motto "Respecting human life and maintaining corporate activities", CKD has researched and developed the explosion proof general purpose valves to assist in automation and energy conservation at hazardous places. Research, design, material selection, processing and inspection processes which are connected with a strong tie of "safety" are carried out with the most detailed attention. These CKD explosion proof general purpose valves constantly monitor hazardous places and ensure safety.

### CONTENTS


Series variation 356

⚠ Safety precautions 358

**Pressure and explosion proof structure d2G4**

Direct acting

- AB41E4/42E4 (2 port) NC (normally closed) type / NO (normally open) type 360
- AG41E4/43E4/44E4 (3 port) Universal / NC pressurization / NO pressurization type 366

Pilot operated 2 port solenoid valve, piston structure

- AP11E4/12E4 NC (normally closed) type / NO (normally open) type 370
- AP21E4/22E4 NC (normally closed) type / NO (normally open) type 374

Pilot operated 2 port solenoid valve, diaphragm structure

- AD11E4/12E4 NC (normally closed) type / NO (normally open) type 380
- AD21E4/22E4 NC (normally closed) type / NO (normally open) type 384

Pilot kick type 2 port solenoid valve, diaphragm structure

- ADK11E4/12E4 NC (normally closed) type / NO (normally open) type 390

**Pressure and explosion proof structure d2G2**

Direct acting 2 port solenoid valve

- AB41E2 NC (normally closed) type 394

Pilot operated 2 port solenoid valve, piston structure

- AP11E2/12E2 NC (normally closed) type / NO (normally open) type 398
- AP21E2/22E2 NC (normally closed) type / NO (normally open) type 402

CAD Electronic Catalog file list 408


⚠ Always read the precautions in the Introduction and page 358 before starting use.

# Series variation

## Explosion proof general purpose direct acting, pilot operated 2, 3 port solenoid valve (explosion proof general purpose valve)

| Explosion proof | No. of port | Model | | Structure | Actuation | Working fluid: Air | Low vacuum | Water | Kerosene | Oil (50 mm²/s or less) | Steam |
|---|---|---|---|---|---|---|---|---|---|---|---|
| d2G4 | 2 port | | AB41E4 | Direct acting | NC (normally closed) type | ● | ● | ● | ● | ● | |
| | | | AB42E4 | | NO (normally open) type | ● | ● | ● | ● | ● | |
| | 3 port | | AG41E4 | Direct acting | Universal type | ● | ● | ● | ● | ● | |
| | | | AG43E4 | | NC pressurization type | ● | ● | ● | ● | ● | |
| | | | AG44E4 | | NO pressurization type | ● | ● | ● | ● | ● | |
| | 2 port | | AP11E4 *1 | Pilot operated Piston structure | NC (normally closed) type | ● | | ● | ● | ● | |
| | | | AP12E4 *1 | | NO (normally open) type | ● | | ● | ● | ● | |
| | | | AP21E4 | | NC (normally closed) type | ● | | ● | ● | ● | |
| | | | AP22E4 | | NO (normally open) type | ● | | ● | ● | ● | |
| | | | AD11E4 *1 | Pilot operated Diaphragm structure | NC (normally closed) type | ● | | ● | ● | ● | |
| | | | AD12E4 *1 | | NO (normally open) type | ● | | ● | ● | ● | |
| | | | AD21E4 | | NC (normally closed) type | ● | | ● | ● | ● | |
| | | | AD22E4 | | NO (normally open) type | ● | | ● | ● | ● | |
| | | | ADK11E4 | Pilot operated | NC (normally closed) type | ● | ● | ● | ● | ● | |
| | | | ADK12E4 | Diaphragm kick type | NO (normally open) type | ● | ● | ● | ● | ● | |
| d2G2 | 2 port | | AB41E2 | Direct acting | NC (normally closed) type | ● | | ● | ● | ● | ● |
| | | | AP11E2 *1 | Pilot operated Piston structure | NC (normally closed) type | ● | | ● | ● | ● | ● |
| | | | AP12E2 *1 | | NO (normally open) type | ● | | ● | ● | ● | ● |
| | | | AP21E2 | | NC (normally closed) type | ● | | ● | ● | ● | ● |
| | | | AP22E2 | | NO (normally open) type | ● | | ● | ● | ● | ● |

● Explosion proof specifications

| Explosion proof structure | Electromagnet model no. | Certification number | Port | Coil type | Ambient temperature | Fluid temperature | Applicable solenoid valve |
|---|---|---|---|---|---|---|---|
| d2G4 | EB21-G | No. T64349 | 2 | B | -10 to 50˚C | -10 to 60˚C | ● Direct acting (AB41E4 Series)<br>● Pilot operated<br>Piston structure (AP11E4 Series)<br>Diaphragm structure (AD11E4 Series) |
| | EB31-G | No. T64346 | 3 | | | | ● Direct acting (AG41E4 Series)<br>● Direct acting (AG43E4 Series)<br>● Direct acting (AG44E4 Series) |
| | EB22-G | No. T64352 | 2 | | | | ● Direct acting (AB42E4 Series)<br>● Pilot operated<br>Piston structure (AP12E4/AP22E4 Series)<br>Diaphragm structure (AD12E4/AD22E4 Series) |
| | EB23-G | No. T64355 | | | | | ● Diaphragm kick type (ADK11E4 Series) |
| | EB24-G | No. T64358 | | | | | ● Diaphragm kick type (ADK12E4 Series) |
| d2G2 | EH21-G | No. T64351 | 2 | H | -10 to 40˚C | 5 to 181˚C | ● Direct acting (AB41E2 Series)<br>● Pilot operated (AP11E2/AP21E2 Series) |
| | EH22-G | No. T64354 | | | | | ● Pilot operated (AP12E2/AP22E2 Series) |

* Other specifications include products which can be used at an ambient temperature of 60˚C and fluid temperature of 70˚C. Contact CKD for more information.

| | Port size | | | | | | | | | | | Page |
|---|---|---|---|---|---|---|---|---|---|---|---|---|
| | Rc1/4 | Rc3/8 | Rc1/2 | Rc3/4 | Rc1 | Rc1 1/4 | 32 flange | Rc1 1/2 | 40 flange | Rc2 | 50 flange | |
| | ● | ● | | | | | | | | | | 360 |
| | ● | ● | | | | | | | | | | 360 |
| | ● | ● | | | | | | | | | | 366 |
| | ● | ● | | | | | | | | | | 366 |
| | ● | ● | | | | | | | | | | 366 |
| | | | ● | ● | ● | | | | | | | 370 |
| | | | ● | ● | ● | | | | | | | 370 |
| | | | | | | ● | ● | ● | ● | ● | ● | 374 |
| | | | | | | ● | ● | ● | ● | ● | ● | 374 |
| | | | ● | ● | ● | | | | | | | 380 |
| | | | ● | ● | ● | | | | | | | 380 |
| | | | | | | ● | ● | ● | ● | ● | ● | 384 |
| | | | | | | ● | ● | ● | ● | ● | ● | 384 |
| | | | ● | ● | ● | | | | | | | 390 |
| | | | ● | ● | ● | | | | | | | 390 |
| | ● | ● | | | | | | | | | | 394 |
| | | | ● | ● | ● | | | | | | | 398 |
| | | | ● | ● | ● | | | | | | | 398 |
| | | | | | | ● | ● | ● | ● | ● | ● | 402 |
| | | | | | | ● | ● | ● | ● | ● | ● | 402 |

Safety precautions

# Always read this section before starting use.

## Explosion proof type direct acting, pilot operated 2, 3 port solenoid valve

## Design & Selection

### CAUTION

**1** Selection standards

Thoroughly read and comprehend the section "Standards and approved parts" (pages 59 to 60 in the Introduction) for the selection standards for the explosion proof solenoid valve.

## Installation, Piping & Wiring

### CAUTION

**1** Wiring

(1) Refer to the following drawing when wiring.

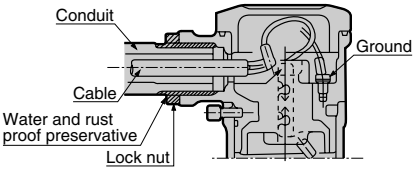


<For conduit thread>

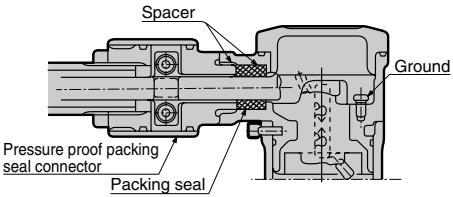


<For pressure proof packing seal>

(2) A terminal box rotates 270˚. The orientation can be changed by loosening the non-rotating bolt. After wiring and setting the wiring direction, tighten the non-rotating bolt with a torque of 0.6 to 0.8N·m to fix the terminal box. If the non-rotating bolt is loose, the terminal box could fall off during use. If the terminal box rotates, the rotating section could be damaged, or the internal wires could break. When laying the electric wires, do not loosen any bolts other than the four terminal box cap bolts and non-rotating bolt. Otherwise, the explosion-proof performance will not be guaranteed.

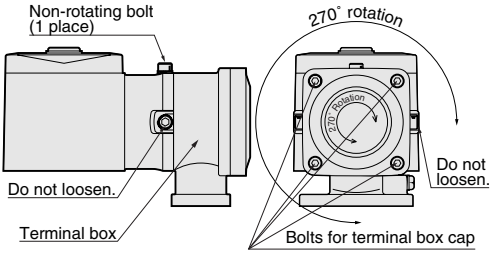


(3) Insert a fuse (1A), etc., in the electric circuit.

## Maintenance

### CAUTION

**1** Maintenance of coil case section

If the coil case section, which has a pressure and explosion proof structure, must be disassembled when inspecting, consult with CKD.

For precautions other than above, refer to the precautions given in pages 124, 226 and 227 for the basic solenoid valves (direct acting general purpose valve, pilot operated general purpose valve and pilot kick type general purpose valve).

MEMO

Explosion proof direct acting 2 port solenoid valve
(general purpose valve)

# AB41E4/AB42E4 Series

- Pressure and explosion proof structure d2G4 (flame-proof grade 2, ignitability G4)
- NC (normally closed) type, NO (normally open) type
- Port size: Rc1/4, Rc3/8

RoHS CAD

## JIS symbol

- AB41E4:
  NC (normally closed) type

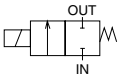


- AB42E4:
  NO (normally open) type

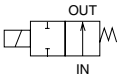


## Common specifications

| Item | AB41E4 | AB42E4 |
|---|---|---|
| Working fluid | Air, low vacuum (1.33 x $10^2$ Pa (abs)), water, kerosene, oil (50 $mm^2$/s or less) | |
| Working pressure differential range MPa | 0 to 5 (refer to max. working pressure differential in individual specifications.) | 0 to 2 (refer to max. working pressure differential in individual specifications.) |
| Max. working pressure MPa | 5 | 2 |
| Withstanding pressure (water) MPa | 25 | |
| Fluid temperature ˚C | -10 to 60 (no freezing) | |
| Ambient temperature ˚C | -10 to 50 | |
| Heat proof class | B | |
| Atmosphere | Outdoors/flammable etc. (flame-proof grade 1 to 2, ignitability G1 to G4) | |
| Valve structure | Direct acting poppet structure | |
| Valve seat leakage $cm^3$/min. (ANR) | 0.2 or less (for PTFE sealant: 300 or less) (air) | |
| Mounting attitude | Free | |
| Weight kg | 1.1 | |

## Individual specifications

| Item / Model no. | Port size | Orifice (mm) | Max. working pressure differential (MPa) Air AC | Air DC | Water, hot water, kerosene AC | Water, hot water, kerosene DC | Oil (50 $mm^2$/s) AC | Oil (50 $mm^2$/s) DC | Rated voltage | Apparent power (VA) Holding 50 Hz | Holding 60 Hz | Starting 50 Hz | Starting 60 Hz | Power consumption (W) AC 50/60 Hz | DC |
|---|---|---|---|---|---|---|---|---|---|---|---|---|---|---|---|
| NC (normally closed) type | | | | | | | | | | | | | | | |
| AB41E4-$^{02}_{03}$-1 | Rc1/4 Rc3/8 | 1.5 | 5.0 | 4.0 | 4.5 | 4.0 | 4.0 | 4.0 | 100 VAC 50/60 Hz 110 VAC 60 Hz 200 VAC 50/60 Hz 220 VAC 60 Hz | 18 | 15 | 29 | 24 | 8/7 | 11.6 |
| -2 | | 2.0 | 3.0 | 2.5 | 2.7 | 2.5 | 2.5 | 2.5 | | | | | | | |
| -3 | | 3.0 | 1.5 | 0.9 | 1.3 | 0.9 | 0.9 | 0.9 | | | | | | | |
| -4 | | 3.5 | 1.2 | 0.6 | 0.9 | 0.6 | 0.6 | 0.6 | | | | | | | |
| -5 | | 4.0 | 1.0 | 0.5 | 0.7 | 0.5 | 0.5 | 0.5 | | | | | | | |
| -6 | | 5.0 | 0.6 | 0.25 | 0.4 | 0.25 | 0.25 | 0.25 | | | | | | | |
| -7 | | 7.0 | 0.25 | 0.1 | 0.2 | 0.1 | 0.15 | 0.1 | | | | | | | |
| NO (normally open) type | | | | | | | | | | | | | | | |
| AB42E4-$^{02}_{03}$-1 | Rc1/4 Rc3/8 | 1.5 | 2.0 | 2.0 | 2.0 | 2.0 | 2.0 | 2.0 | 100 VAC 50/60 Hz 110 VAC 60 Hz 200 VAC 50/60 Hz 220 VAC 60 Hz | 22 | 18 | 35 | 29 | 8.7/6.7 | 15.5 |
| -2 | | 2.0 | 1.0 | 1.0 | 1.0 | 1.0 | 1.0 | 1.0 | | | | | | | |
| -3 | | 3.0 | 0.7 | 0.7 | 0.7 | 0.7 | 0.7 | 0.7 | | | | | | | |
| -4 | | 3.5 | 0.5 | 0.5 | 0.5 | 0.5 | 0.5 | 0.5 | | | | | | | |
| -5 | | 4.0 | 0.4 | 0.4 | 0.4 | 0.4 | 0.4 | 0.4 | | | | | | | |
| -6 | | 5.0 | 0.25 | 0.25 | 0.25 | 0.25 | 0.25 | 0.25 | | | | | | | |
| -7 | | 7.0 | 0.15 | 0.15 | 0.15 | 0.15 | 0.15 | 0.15 | | | | | | | |

*1: The port size symbol is 02 for Rc1/4 (8A) and 03 for Rc3/8 (10A).
*2: Refer to DC column for the maximum working pressure differential of AB41E4 type coil with diode.
*3: Voltage fluctuation should be within -10 to +5% of the rated voltage.
*4: When using with a low vacuum, vacuum the OUT port side.

## Flow characteristics

| Model no. | Port size | Orifice (mm) | Flow characteristics | | |
|---|---|---|---|---|---|
| | | | C [dm³/(s·bar)] | b | Cv flow factor |
| NC (normally closed) type | | | | | |
| **AB41E4-$^{02}_{03}$-1** | Rc1/4<br>Rc3/8 | 1.5 | 0.29 | 0.53 | 0.1 |
| **-2** | | 2.0 | 0.53 | 0.52 | 0.15 |
| **-3** | | 3.0 | 1.1 | 0.52 | 0.31 |
| **-4** | | 3.5 | 1.7<br>(1.5) | 0.49<br>(0.47) | 0.42<br>(0.40) |
| **-5** | | 4.0 | 2.1<br>(1.9) | 0.48<br>(0.47) | 0.54<br>(0.48) |
| **-6** | | 5.0 | 3.0<br>(2.6) | 0.42<br>(0.38) | 0.80<br>(0.62) |
| **-7** | | 7.0 | 4.8<br>(4.6) | 0.29<br>(0.37) | 1.0<br>(0.82) |
| NO (normally open) type | | | | | |
| **AB42E4-$^{02}_{03}$-1** | Rc1/4<br>Rc3/8 | 1.5 | 0.29 | 0.53 | 0.1 |
| **-2** | | 2.0 | 0.53 | 0.52 | 0.15 |
| **-3** | | 3.0 | 1.1 | 0.52 | 0.31 |
| **-4** | | 3.5 | 1.7<br>(1.5) | 0.49<br>(0.47) | 0.40 |
| **-5** | | 4.0 | 2.1<br>(1.9) | 0.48<br>(0.47) | 0.47 |
| **-6** | | 5.0 | 3.0<br>(2.6) | 0.42<br>(0.38) | 0.63<br>(0.62) |
| **-7** | | 7.0 | 4.8<br>(4.6) | 0.29<br>(0.37) | 1.0<br>(0.82) |

*1: Effective sectional area S and sonic conductance C are converted as S ≈ 5.0 × C.
*2: Values shown in ( ) are for stainless steel body.

## How to order

**AB4①E4 - 02 - 3 - 0 3 T A - AC100V**

- Model no.
- Ⓐ Actuation
- Ⓑ Port size *2
- Ⓒ Orifice
- Ⓓ Body/sealant combination *3
- Ⓔ Type of coil *4
- Ⓕ Junction box *5
- Ⓖ Other options *6
- Ⓗ Voltage *8, *9

| Symbol | Descriptions | Model no. AB41E4 | Model no. AB42E4 |
|---|---|---|---|
| **Ⓐ Actuation** | | | |
| 1 | NC (normally closed) type | ● | |
| 2 | NO (normally open) type | | ● |
| **Ⓑ Port size** | | | |
| 02 | Rc1/4 | ● | ● |
| 03 | Rc3/8 | ● | ● |
| **Ⓒ Orifice** | | | |
| 1 | ø1.5 | ● | ● |
| 2 | ø2 | ● | ● |
| 3 | ø3 | ● | ● |
| 4 | ø3.5 | ● | ● |
| 5 | ø4 | ● | ● |
| 6 | ø5 | ● | ● |
| 7 | ø7 | ● | ● |

**Ⓓ Body/sealant combination**

| | | Body | Sealant | Treatment | Remarks | | |
|---|---|---|---|---|---|---|---|
| 0 | Std. | Brass | Nitrile rubber | - | Air, water, low vacuum, kerosene, oil (up to 60˚C) | ● | ● |
| B | Option | | Fluoro rubber | | - | ● | ● |
| C | | | PTFE | | - | ● | ● |
| D | | Stainless steel | Nitrile rubber | - | Air, water, low vacuum, kerosene, oil (up to 60˚C) | ● | ● |
| E | | | Fluoro rubber | | - | ● | ● |
| F | | | PTFE | | - | ● | ● |
| H | | Brass | Nitrile rubber | Oil free | Air, water, low vacuum, kerosene, oil (up to 60˚C) | ● | ● |
| J | | | Fluoro rubber | | - | ● | ● |
| K | | | PTFE | | - | ● | ● |
| P | | | Ethylene propylene diene rubber | | - | ● | ● |
| L | | Stainless steel | Nitrile rubber | | Air, water, low vacuum, kerosene, oil (up to 60˚C) | ● | ● |
| M | | | Fluoro rubber | | - | ● | ● |
| N | | | PTFE | | - | ● | ● |
| R | | | Ethylene propylene diene rubber | | - | ● | ● |

Refer to page 36 in the Introduction for details on the material combinations.

| | | | | |
|---|---|---|---|---|
| **Ⓔ Type of coil** | | | | |
| 3 | | Heat proof class B explosion proof coil d2G4 | ● | ● |
| 5 | | Heat proof class B diode integrated explosion proof coil d2G4 | ● | ● |
| **Ⓕ Junction box** | | | | |
| T | Std. | Conduit (G1/2) | ● | ● |
| L | Option | Pressure proof packing seal (G1/2) connection, cable OD ø7.5 to 8.4 | ● | ● |
| M | | Pressure proof packing seal (G1/2) connection, cable OD ø8.5 to 9.4 | ● | ● |
| **Ⓖ Other options** | | | | |
| Blank | Std. | No options | ● | ● |
| A | Option | Manual override (locking) | ● | |
| B | | Mounting plate | ● | ● |
| AB | | Manual override and mounting plate | ● | |
| **Ⓗ Voltage** | | | | |
| AC100V | | 100 VAC 50/60 Hz, 110 VAC 60 Hz | ● | ● |
| AC200V | | 200 VAC 50/60 Hz, 220 VAC 60 Hz | ● | ● |

### <Example of model number>

**AB41E4-02-3-03TA-AC100V**
Series: AB41E4

- Ⓐ Actuation : NC (normally closed) type
- Ⓑ Port size : Rc1/4
- Ⓒ Orifice : ø3
- Ⓓ Body/sealant combination : Body - brass, sealant - nitrile rubber
- Ⓔ Type of coil : Heat proof class B explosion proof coil d2G4
- Ⓕ Junction box : Pressure proof packing seal (G1/2) connection
- Ⓖ Other options : Manual override (locking)
- Ⓗ Voltage : 100 VAC 50/60 Hz, 110 VAC 60 Hz

### ⚠ Note on model no. selection

*1: The combinations indicated with ● in the above table are available.
*2: G and NPT threads are used for piping port. Contact CKD for details.
*3: The ethylene propylene diene rubber seal combination (Ⓓ P/R) cannot be used with air. (Compressed air contains oil, and ethylene propylene diene rubber is not oil-resistant.)
*4: For the heat proof class B diode integrated coil, the AC power voltage is converted into a DC coil voltage by the diode.
*5: A pressure proof packing seal (G3/4) connection is also available. Contact CKD for more information. Note that the conduit connection (G3/4) is not available.
*6: When Ⓑ is C, F, K or N, the manual override (Ⓖ A/AB) is not available.
*7: Tropicalization (rust-proof coating) is available as a measure against rust. Contact CKD for more information. Note that the tropicalization is not available when the manual override option A is selected.
*8: 100 VAC coil is compatible with 100 VAC 50/60 Hz and 110 VAC 60 Hz, and 200 VAC coil is compatible with 200 VAC 50/60 Hz and 220 VAC 60 Hz.
The heat proof class B diode integrated explosion proof coil (Ⓔ 5) can be used with 100 VAC 50/60 Hz or 200 VAC 50/60 Hz.
*9: Other voltages available are as follows. Contact CKD for more information.
12, 24, 48, 110, 115, 120, 220, 240, 380, 400, 415, 440, 480, 500 VAC
110, 220 VAC (with diode); 6, 12, 24, 48, 100, 110, 200, 220 VDC

## Internal structure and parts list

● AB41E4 Series

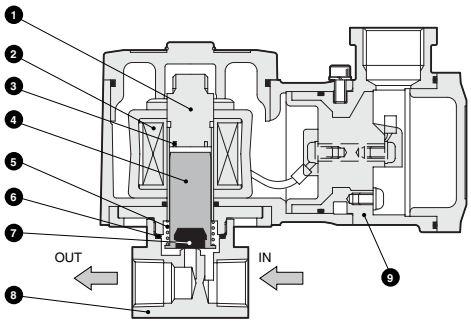


| No. | Parts name | Material | | No. | Parts name | Material | |
|---|---|---|---|---|---|---|---|
| 1 | Core assembly | SUS405 or equivalent, 316L, 403 | Stainless steel | 6 | O ring | NBR (FKM, PTFE, EPDM) | NBR: Nitrile rubber<br>FKM: Fluoro rubber |
| 2 | Coil assembly | —— | —— | | | | |
| 3 | Shading coil | Cu<br>(Ag for stainless steel body) | Copper<br>(silver for stainless steel body) | 7 | Valve sealant | NBR (FKM, PTFE, EPDM) | EPDM: Ethylene propylene diene rubber<br>PTFE: Tetrafluoroethylene resin |
| 4 | Plunger | SUS405 or equivalent | Stainless steel | 8 | Body | C3771 (SUS303) | Brass (stainless steel) |
| 5 | Plunger spring | SUS304 | Stainless steel | 9 | Coil case | ADC12 | Aluminum die casting |

( ) shows options.

● AB42E4 Series

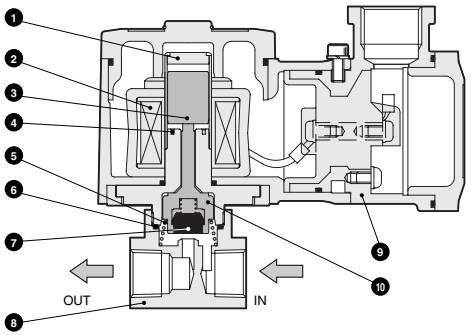


| No. | Parts name | Material | | No. | Parts name | Material | |
|---|---|---|---|---|---|---|---|
| 1 | Core assembly | SUS405 or equivalent, 316L, 304 | Stainless steel | 8 | Body | C3771 (SUS303) | Brass (stainless steel) |
| 2 | Coil | —— | —— | 9 | Coil case | ADC12 | Aluminum die casting |
| 3 | Plunger | SUS405 or equivalent | Stainless steel | 10 | NO valve | POM (PFA, SUS303) | When body/sealant combination = 0/D/H/L<br>: Polyacetal resin<br>Combinations other than above<br>: Perfluoroalkoxy resin, stainless steel |
| 4 | Shading coil | Cu (Ag for stainless steel body) | Copper (silver for stainless steel body) | | | | |
| 5 | Spring | SUS304 | Stainless steel | | | | |
| 6 | O ring | NBR<br>(FKM, PTFE, EPDM) | NBR: Nitrile rubber<br>FKM: Fluoro rubber | | | | |
| 7 | Valve sealant | NBR<br>(FKM, PTFE, EPDM) | EPDM: Ethylene propylene diene rubber<br>PTFE: Tetrafluoroethylene resin | | | | |

( ) shows options.

## Dimensions

● Conduit (G1/2) type
AB41E4 -*-*-**T
AB42E4

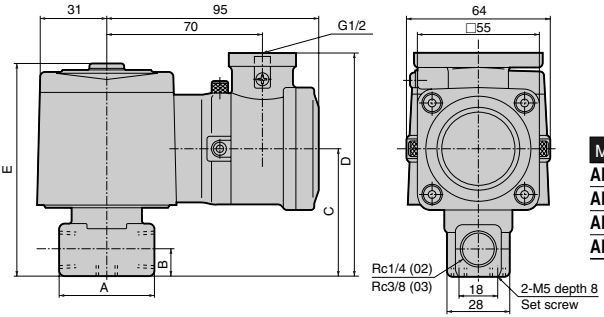


| Model no. | A | B | C | D | E |
|---|---|---|---|---|---|
| **AB41E4-02-1 to 6** | 36 | 11 | 54 | 97 | 92 |
| **AB41E4-$^{02\text{-}7}_{03\text{-}1\text{ to }7}$** | 40 | 12 | 57 | 100 | 95 |
| **AB42E4-02-1 to 6** | 36 | 11 | 58 | 101 | 96 |
| **AB42E4-$^{02\text{-}7}_{03\text{-}1\text{ to }7}$** | 40 | 12 | 61 | 104 | 99 |

## Optional dimensions

● Stainless steel body
AB41E4 -*-* D, E, F, R
AB42E4 L, M, N

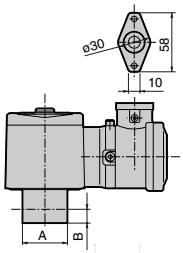


| Model no. | A | B |
|---|---|---|
| **AB41E4-02-1 to 6** | ø37.5 | 11 |
| **AB41E4-$^{02\text{-}7}_{03\text{-}1\text{ to }7}$** | ø45 | 12 |
| **AB42E4-02-1 to 6** | ø37.5 | 11 |
| **AB42E4-$^{02\text{-}7}_{03\text{-}1\text{ to }7}$** | ø45 | 12 |

● Pressure proof packing seal (G1/2) connection type
AB41E4 -*-*-** L, M
AB42E4

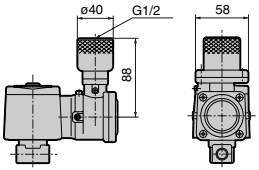


● Manual override (locking)
AB41E4-*-*-*** A

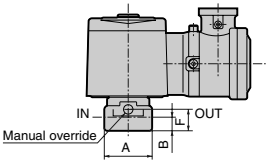


| Model no. | A | B | F |
|---|---|---|---|
| **AB41E4-02-1 to 6** | 36 | 11 | 19.5 |
| **AB41E4-$^{02\text{-}7}_{03\text{-}1\text{ to }7}$** | 40 | 12 | 22.5 |

● Mounting plate
AB41E4 -*-*-*** B
AB42E4 AB

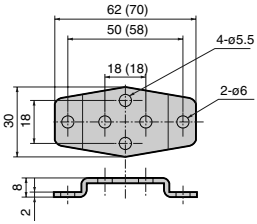


Dimensions shown in ( ) are for the mounting plate No. 2.

| Code | Applicable model | |
|---|---|---|
| **Mounting plate No. 1 GE-100106** | ● **AB41E4-$^{02}_{03}$-1 to 7** | **Brass body** |
| | ● **AB41E4-02-1 to 6** | **Stainless steel body** |
| | ● **AB42E4-$^{02}_{03}$-1 to 7** | **Brass body** |
| | ● **AB42E4-02-1 to 6** | **Stainless steel body** |
| **Mounting plate No. 2 GE-100159** | ● **AB41E4-02-7** | **Stainless steel body** |
| | ● **AB41E4-03-1 to 7** | **Stainless steel body** |
| | ● **AB42E4-02-7** | **Stainless steel body** |
| | ● **AB42E4-03-1 to 7** | **Stainless steel body** |

MEMO

Explosion proof direct acting 3 port solenoid valve
(general purpose valve)

# AG41E4/AG43E4/AG44E4 Series

- Pressure and explosion proof structure d2G4 (flame-proof grade 2, ignitability G4)
- Universal type, NC pressurization type, NO pressurization type
- Port size: Rc1/4, Rc3/8

RoHS CAD

## JIS symbol

- AG41E4:
  Universal type

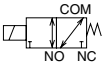


- AG43E4:
  NC pressurization type

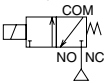


- AG44E4:
  NO pressurization type

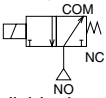


## Common specifications

| Item | AG41E4/AG43E4/AG44E4 |
|---|---|
| Working fluid | Air, low vacuum (1.33 x $10^2$ Pa (abs)), water, kerosene, oil (50 $mm^2$/s or less) |
| Working pressure differential range MPa | 0 to 1.5 (refer to max. working pressure differential in individual specifications.) |
| Withstanding pressure (water) MPa | 25 |
| Fluid temperature ˚C | -10 to 60 (no freezing) |
| Ambient temperature ˚C | -10 to 50 |
| Heat proof class | B |
| Atmosphere | Outdoors/flammable etc. (flame-proof grade 1 to 2, ignitability G1 to G4) |
| Valve structure | Direct acting poppet structure |
| Valve seat leakage $cm^3$/min. (ANR) | 0.2 or less (for PTFE sealant: 300 or less) (air) |
| Mounting attitude | Free |
| Weight kg | 1.1 |

## Individual specifications

| Item / Model no. | Port size | Orifice (mm) TOP | Orifice (mm) BODY | Max. working pressure differential (MPa) Air AC | Air DC | Water, hot water, kerosene AC | Water, hot water, kerosene DC | Oil (50 $mm^2$/s) AC | Oil (50 $mm^2$/s) DC | Max. working pressure MPa | Rated voltage | Apparent power (VA) Holding 50 Hz | Holding 60 Hz | Starting 50 Hz | Starting 60 Hz | Power consumption (W) AC 50/60 Hz | DC |
|---|---|---|---|---|---|---|---|---|---|---|---|---|---|---|---|---|---|
| Universal type | | | | | | | | | | | | | | | | | |
| **AG41E4-$^{02}_{03}$-1** | Rc1/4 | 2.0 | 2.0 | 1.0 | 0.7 | 1.0 | 0.7 | 0.4 | 0.3 | 1 | 100 VAC 50/60 Hz 110 VAC 60 Hz 200 VAC 50/60 Hz 220 VAC 60 Hz | 22 | 17 | 35 | 27 | 10/8 | 11.6 |
| **-2** | Rc3/8 | 2.3 | 2.3 | 0.7 | 0.4 | 0.7 | 0.4 | 0.25 | 0.15 | | | | | | | | |
| NC pressurization type | | | | | | | | | | | | | | | | | |
| **AG43E4-$^{02}_{03}$-4** | Rc1/4 | 3.0 | 3.0 | 0.7 | 0.7 | 0.7 | 0.7 | 0.7 | 0.7 | 1 | | 22 | 17 | 35 | 27 | 10/8 | 11.6 |
| **-5** | Rc3/8 | 3.5 | 3.0 | 0.4 | 0.4 | 0.4 | 0.4 | 0.4 | 0.4 | | | | | | | | |
| NO pressurization type | | | | | | | | | | | | | | | | | |
| **AG44E4-$^{02}_{03}$-1** | Rc1/4 | 2.0 | 2.0 | 1.2 | 0.75 | 1.5 | 1.0 | 1.0 | 0.45 | 1.5 | | 22 | 17 | 35 | 27 | 10/8 | 11.6 |
| **-3** | Rc3/8 | 2.0 | 3.0 | 1.2 | 0.75 | 1.5 | 0.9 | 1.0 | 0.45 | | | | | | | | |
| **-4** | | 3.0 | 3.0 | 0.4 | 0.3 | 0.5 | 0.3 | 0.3 | 0.2 | | | | | | | | |

*1: The port size symbol is 02 for Rc1/4 (8A) and 03 for Rc3/8 (10A).
*2: Refer to DC column for the maximum working pressure differential of coil with diode.
*3: Voltage fluctuation should be within -10 to +5% of the rated voltage.
*4: When PTFE sealant is used for AG41E4, the NO port cannot be pressurized.
*5: When using with a low vacuum, vacuum the following port side.
Universal type: COM/NC/NO port NC pressurization type: NO port NO pressurization type: NC port

## Flow characteristics

| Model no. | Port size | Orifice (mm) TOP | Orifice (mm) BODY | Flow characteristics C [$dm^3$/(s·bar)] TOP | C BODY | b TOP | b BODY | Cv flow factor TOP | Cv BODY |
|---|---|---|---|---|---|---|---|---|---|
| Universal type | | | | | | | | | |
| **AG41E4-$^{02}_{03}$-1** | Rc1/4 | 2.0 | 2.0 | 0.53 | 0.53 | 0.54 | 0.52 | 0.15 | 0.15 |
| **-2** | Rc3/8 | 2.3 | 2.3 | 0.74 | 0.74 | 0.66 | 0.53 | 0.19 | 0.19 |
| NC pressurization type | | | | | | | | | |
| **AG43E4-$^{02}_{03}$-4** | Rc1/4 | 3.0 | 3.0 | 1.1 | 1.1 | 0.72 | 0.52 | 0.31 | 0.31 |
| **-5** | Rc3/8 | 3.5 | 3.0 | 1.5 | 1.1 | 0.62 | 0.52 | 0.40 | 0.31 |
| NO pressurization type | | | | | | | | | |
| **AG44E4-$^{02}_{03}$-1** | Rc1/4 | 2.0 | 2.0 | 0.53 | 0.53 | 0.54 | 0.52 | 0.15 | 0.15 |
| **-3** | Rc3/8 | 2.0 | 3.0 | 0.53 | 1.1 | 0.54 | 0.52 | 0.15 | 0.31 |
| **-4** | | 3.0 | 3.0 | 1.1 | 1.1 | 0.72 | 0.52 | 0.31 | 0.31 |

*1: Effective sectional area S and sonic conductance C are converted as S = 5.0 × C.

## How to order

**AG4①E4 - 02 - 2 - 0 3 T A - AC200V**

- Model no.
- Ⓐ Actuation
- Ⓑ Port size *2
- Ⓒ Orifice
- Ⓓ Body/sealant combination *3 *10
- Ⓔ Type of coil *4
- Ⓕ Junction box *5
- Ⓖ Other options *6
- Ⓗ Voltage *8, *9

| Symbol | Descriptions | AG41E4 | AG43E4 | AG44E4 |
|---|---|---|---|---|
| **Ⓐ Actuation** | | | | |
| 1 | Universal type | ● | | |
| 3 | NC pressurization type | | ● | |
| 4 | NO pressurization type | | | ● |
| **Ⓑ Port size** | | | | |
| 02 | Rc1/4 | ● | ● | ● |
| 03 | Rc3/8 | ● | ● | ● |

**Ⓒ Orifice**

| | TOP | BODY | | | | |
|---|---|---|---|---|---|---|
| 1 | ø2.0 | ø2.0 | | ● | | ● |
| 2 | ø2.3 | ø2.3 | | ● | | |
| 3 | ø2.0 | ø3.0 | | | | ● |
| 4 | ø3.0 | ø3.0 | | | ● | ● |
| 5 | ø3.5 | ø3.0 | | | ● | |

**Ⓓ Body/sealant combination**

| | | Body | Sealant | Treatment | Remarks | | | |
|---|---|---|---|---|---|---|---|---|
| 0 | Std. | Brass | Nitrile rubber | - | Air, water, low vacuum, kerosene, oil (up to 60˚C) | ● | ● | ● |
| B | Option | | Fluoro rubber | | - | ● | ● | ● |
| C | | | PTFE | | - | ● | ● | |
| D | | Stainless steel | Nitrile rubber | - | Air, water, low vacuum, kerosene, oil (up to 60˚C) | ● | ● | ● |
| E | | | Fluoro rubber | | - | ● | ● | ● |
| F | | | PTFE | | - | ● | ● | |
| H | | Brass | Nitrile rubber | Oil free | Air, water, low vacuum, kerosene, oil (up to 60˚C) | ● | ● | ● |
| J | | | Fluoro rubber | | - | ● | ● | ● |
| K | | | PTFE | | - | ● | ● | |
| P | | | Ethylene propylene diene rubber | | - | ● | ● | ● |
| L | | Stainless steel | Nitrile rubber | | Air, water, low vacuum, kerosene, oil (up to 60˚C) | ● | ● | ● |
| M | | | Fluoro rubber | | - | ● | ● | ● |
| N | | | PTFE | | - | ● | ● | |
| R | | | Ethylene propylene diene rubber | | - | ● | ● | ● |

Refer to page 36 in the Introduction for details on the material combinations.

**Ⓔ Type of coil**

| | | | | |
|---|---|---|---|---|
| 3 | Heat proof class B explosion proof coil d2G4 | ● | ● | ● |
| 5 | Heat proof class B diode integrated explosion proof coil d2G4 | ● | ● | ● |

**Ⓕ Junction box**

| | | | | | |
|---|---|---|---|---|---|
| T | Std. | Conduit (G1/2) | ● | ● | ● |
| L | Option | Pressure proof packing seal (G1/2) connection, cable OD ø7.5 to 8.4 | ● | ● | ● |
| M | | Pressure proof packing seal (G1/2) connection, cable OD ø8.5 to 9.4 | ● | ● | ● |

**Ⓖ Other options**

| | | | | | |
|---|---|---|---|---|---|
| Blank | Std. | No options | ● | ● | ● |
| A | Option | Manual override (locking) | ● | ● | ● |
| B | | Mounting plate | ● | ● | ● |
| AB | | Manual override and mounting plate | ● | ● | ● |

**Ⓗ Voltage**

| | | | | |
|---|---|---|---|---|
| AC100V | 100 VAC 50/60 Hz, 110 VAC 60 Hz | ● | ● | ● |
| AC200V | 200 VAC 50/60 Hz, 220 VAC 60 Hz | ● | ● | ● |

### <Example of model number>

**AG41E4-02-2-03TA-AC200V**
Series: AG41E4

- Ⓐ Actuation : Universal type
- Ⓑ Port size : Rc1/4
- Ⓒ Orifice : TOP - ø2.3 , BODY - ø2.3
- Ⓓ Body/sealant combination : Body - brass, sealant - nitrile rubber
- Ⓔ Type of coil : Heat proof class B explosion proof coil d2G4
- Ⓕ Junction box : Conduit (G1/2)
- Ⓖ Other options : Manual override (locking)
- Ⓗ Voltage : 200 VAC 50/60 Hz, 220 VAC 60 Hz

### ⚠ Note on model no. selection

*1: The combinations indicated with ● in the above table are available.
*2: G and NPT piping port threads are available only for the COM/NC port.
Contact CKD for more information. (G and NPT threads are not available for the NO port. )
*3: The ethylene propylene diene rubber seal combination (Ⓓ P/R) cannot be used with air. (Compressed air contains oil, and ethylene propylene diene rubber is not oil-resistant.)
*4: For the heat proof class B diode integrated coil, the AC power voltage is converted into a DC coil voltage by the diode.
*5: A pressure proof packing seal (G3/4) connection is also available. Contact CKD for more information. Note that the conduit connection (G3/4) is not available.
*6: When Ⓓ is C, F, K or N, the manual override (Ⓖ A/AB) is not available.
*7: Tropicalization (rust-proof coating) is available as a measure against rust. Contact CKD for more information.
Note that the tropicalization is not available when the manual override option A is selected.
*8: 100 VAC coil is compatible with 100 VAC 50/60 Hz and 110 VAC 60 Hz, and 200 VAC coil is compatible with 200 VAC 50/60 Hz and 220 VAC 60 Hz.
The heat proof class B diode integrated explosion proof coil (Ⓔ 5) can be used with 100 VAC 50/60 Hz or 200 VAC 50/60 Hz.
*9: Other voltages available are as follows. Contact CKD for more information.
12, 24, 48, 110, 115, 120, 220, 240, 380, 400, 415, 440, 480, 500 VAC
110, 220 VAC (with diode); 6, 12, 24, 48, 100, 110, 200, 220 VDC
*10: Even if nitrile rubber is selected for the AG44E4 sealant material, the NO side sealant material will be fluoro rubber.

## Internal structure and parts list

● AG41E4 Series

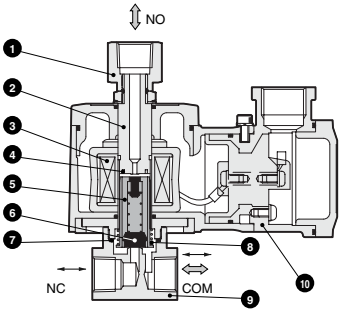


| No. | Parts name | Material | |
|---|---|---|---|
| 1 | Socket | C3604 (SUS303) | Brass (stainless steel) |
| 2 | Core assembly | SUS405 or equivalent, 316L, 403 | Stainless steel |
| 3 | Coil | —— | —— |
| 4 | Shading coil | Cu (Ag for stainless steel body) | Copper (silver for stainless steel body) |
| 5 | Plunger | SUS405 or equivalent | Stainless steel |
| 6 | Valve sealant | NBR (FKM, PTFE, EPDM) | NBR: Nitrile rubber<br>FKM: Fluoro rubber<br>EPDM: Ethylene propylene diene rubber<br>PTFE: Tetrafluoroethylene resin |
| 7 | O ring | NBR (FKM, PTFE, EPDM) | |
| 8 | Plunger spring | SUS304 | Stainless steel |
| 9 | Body | C3771 (SUS303) | Brass (stainless steel) |
| 10 | Coil case | ADC12 | Aluminum die casting |

( ) shows options.

● AG43E4 Series

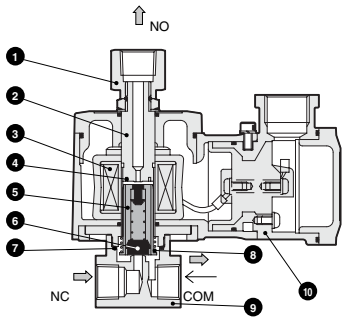


| No. | Parts name | Material | |
|---|---|---|---|
| 1 | Socket | C3604 (SUS303) | Brass (stainless steel) |
| 2 | Core assembly | SUS405 or equivalent, 316L, 403 | Stainless steel |
| 3 | Coil | —— | —— |
| 4 | Shading coil | Cu (Ag for stainless steel body) | Copper (silver for stainless steel body) |
| 5 | Plunger | SUS405 or equivalent | Stainless steel |
| 6 | Valve sealant | NBR (FKM, PTFE, EPDM) | NBR: Nitrile rubber<br>FKM: Fluoro rubber<br>EPDM: Ethylene propylene diene rubber<br>PTFE: Tetrafluoroethylene resin |
| 7 | O ring | NBR (FKM, PTFE, EPDM) | |
| 8 | Plunger spring | SUS304 | Stainless steel |
| 9 | Body | C3771 (SUS303) | Brass (stainless steel) |
| 10 | Coil case | ADC12 | Aluminum die casting |

( ) shows options.

● AG44E4 Series

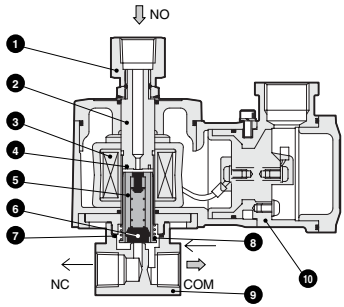


| No. | Parts name | Material | |
|---|---|---|---|
| 1 | Socket | C3604 (SUS303) | Brass (stainless steel) |
| 2 | Core assembly | SUS405 or equivalent, 316L, 403 | Stainless steel |
| 3 | Coil | —— | —— |
| 4 | Shading coil | Cu (Ag for stainless steel body) | Copper (silver for stainless steel body) |
| 5 | Plunger | SUS405 or equivalent | Stainless steel |
| 6 | Valve sealant | NBR (FKM, EPDM) | NBR: Nitrile rubber<br>FKM: Fluoro rubber<br>EPDM: Ethylene propylene diene rubber |
| 7 | O ring | NBR (FKM, EPDM) | |
| 8 | Plunger spring | SUS304 | Stainless steel |
| 9 | Body | C3771 (SUS303) | Brass (stainless steel) |
| 10 | Coil case | ADC12 | Aluminum die casting |

( ) shows options.

## Dimensions and optional dimensions

● Conduit (G1/2) type
AG4*E4-*-*-** T

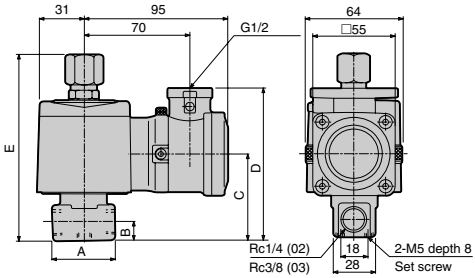


| Model no. | A | B | C | D | E |
|---|---|---|---|---|---|
| **AG41E4-02-1/2** | 36 | 11 | 54 | 97 | 116 |
| **AG41E4-03-1/2** | 40 | 12 | 57 | 100 | 122 |
| **AG43E4-02-4/5** | 36 | 11 | 54 | 97 | 116 |
| **AG43E4-03-4/5** | 40 | 12 | 57 | 100 | 122 |
| **AG44E4-02-1/3/4** | 36 | 11 | 54 | 97 | 116 |
| **AG44E4-03-1/3/4** | 40 | 12 | 57 | 100 | 122 |

● Stainless steel body
AG4*E4-*-*- D, E, F, R L, M, N

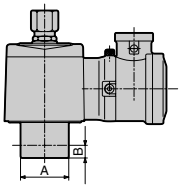


| Model no. | A | B |
|---|---|---|
| **AG41E4-02-1/2** | ø37.5 | 11 |
| **AG41E4-03-1/2** | ø45 | 12 |
| **AG43E4-02-4/5** | ø37.5 | 11 |
| **AG43E4-03-4/5** | ø45 | 12 |
| **AG44E4-02-1/3/4** | ø37.5 | 11 |
| **AG44E4-03-1/3/4** | ø45 | 12 |

● Pressure proof packing seal (G1/2) connection type
AG4*E4-*-*-** L, M

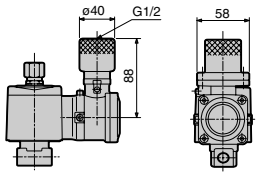


● Manual override (locking)
AG4*E4-*-*-*** A

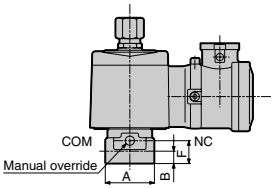


| Model no. | A | B | F |
|---|---|---|---|
| **AG41E4-02-1/2** | 36 | 11 | 19.5 |
| **AG41E4-03-1/2** | 40 | 12 | 22.5 |
| **AG43E4-02-4/5** | 36 | 11 | 19.5 |
| **AG43E4-03-4/5** | 40 | 12 | 22.5 |
| **AG44E4-02-1/3/4** | 36 | 11 | 19.5 |
| **AG44E4-03-1/3/4** | 40 | 12 | 22.5 |

● Mounting plate
AG4*E4-*-*-*** B

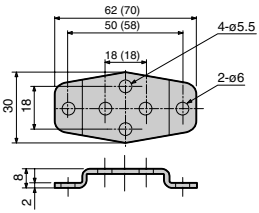


Dimensions shown in ( ) are for the mounting plate No. 2.

| Code | Applicable model | |
|---|---|---|
| Mounting plate No. 1 GE-100106 | ● AG41E4-$^{02}_{03}$-1/2 | Brass body |
| | ● AG41E4-02-1/2 | Stainless steel body |
| | ● AG43E4-$^{02}_{03}$-4/5 | Brass body |
| | ● AG43E4-02-4/5 | Stainless steel body |
| | ● AG44E4-$^{02}_{03}$-1/3/4 | Brass body |
| | ● AG44E4-02-1/3/4 | Stainless steel body |
| Mounting plate No. 2 GE-100159 | ● AG41E4-03-1/2 | Stainless steel body |
| | ● AG43E4-03-4/5 | Stainless steel body |
| | ● AG44E4-03-1/3/4 | Stainless steel body |

Explosion proof pilot operated 2 port solenoid valve
(general purpose valve)

# AP11E4/AP12E4 Series

- Pressure and explosion proof structure d2G4 (flame-proof grade 2, ignitability G4)
- NC (normally closed) type, NO (normally open) type
- Port size: Rc1/2 to Rc1 ● Piston structure

RoHS CAD

## JIS symbol

● AP11E4:
NC (normally closed) type

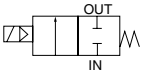


● AP12E4:
NO (normally open) type

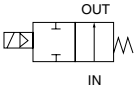


## Common specifications

| Item | AP11E4/AP12E4 |
|---|---|
| Working fluid | Air, water, kerosene, oil (50 mm²/s or less) |
| Working pressure differential range MPa | 0.05 to 1.2 (refer to max. working pressure differential in individual specifications.) |
| Max. working pressure MPa | 2 |
| Withstanding pressure (water) MPa | 10 |
| Fluid temperature ˚C | -10 to 60 (no freezing) |
| Ambient temperature ˚C | -10 to 50 |
| Heat proof class | B |
| Atmosphere | Outdoors/flammable etc. (flame-proof grade 1 to 2, ignitability G1 to G4) |
| Valve structure | Pilot operated poppet, piston structure |
| Valve seat leakage (Note 1) cm³/min. (ANR) | 0.2 or less (for PTFE sealant: 300 or less) (air) |
| Mounting attitude | Free (within working pressure differential range) |

Note 1: For AP11E4 (NC (normally closed) type), these values apply to pneumatic pressure 0.05 to 1.2 MPa, and for AP12E4 (NO (normally open) type), these apply to pneumatic pressure 0.05 to 0.5 MPa.

## Individual specifications

| Item / Model no. | Port size | Orifice (mm) | Min. working pressure diff. (MPa) | Max. working pressure diff. (MPa) Air AC | Air DC | Water, kerosene AC | Water, kerosene DC | Oil (50 mm²/s) AC | Oil (50 mm²/s) DC | Rated voltage | Apparent power (VA) Holding 50 Hz | Holding 60 Hz | Starting 50 Hz | Starting 60 Hz | Power consumption (W) AC 50/60 Hz | DC | Weight (kg) |
|---|---|---|---|---|---|---|---|---|---|---|---|---|---|---|---|---|---|
| NC (normally closed) type | | | | | | | | | | | | | | | | | |
| **AP11E4-15A** | Rc1/2 | 15 | 0.05 | 1.2 | 0.6 | 1.0 | 0.6 | 0.6 | 0.6 | 100 VAC 50/60 Hz<br>110 VAC 60 Hz<br>200 VAC 50/60 Hz<br>220 VAC 60 Hz | 18 | 15 | 29 | 24 | 8/7 | 11.6 | 1.9 |
| **-20A** | Rc3/4 | 20 | | | | | | | | | | | | | | | 2.3 |
| **-25A** | Rc1 | 25 | | | | | | | | | | | | | | | 3.0 |
| NO (normally open) type | | | | | | | | | | | | | | | | | |
| **AP12E4-15A** | Rc1/2 | 15 | 0.05 | 0.5 | 0.5 | 0.5 | 0.5 | 0.5 | 0.5 | 100 VAC 50/60 Hz<br>110 VAC 60 Hz<br>200 VAC 50/60 Hz<br>220 VAC 60 Hz | 22 | 18 | 35 | 29 | 8.7/<br>6.7 | 15.5 | 1.9 |
| **-20A** | Rc3/4 | 20 | | | | | | | | | | | | | | | 2.3 |
| **-25A** | Rc1 | 25 | | | | | | | | | | | | | | | 3.0 |

*1: Refer to DC column for the maximum working pressure differential of AP11E4 type coil with diode.
*2: Voltage fluctuation should be within -10 to +5% of the rated voltage.

## Flow characteristics

| Model no. | Port size | Orifice (mm) | Flow characteristics C [dm³/(s·bar)] | b | Cv flow factor | S (mm²) |
|---|---|---|---|---|---|---|
| NC (normally closed) type | | | | | | |
| **AP11E4-15A** | Rc1/2 | 15 | 21 | 0.22 | 4.5 | - |
| **-20A** | Rc3/4 | 20 | - | - | 9.3 | 162 |
| **-25A** | Rc1 | 25 | - | - | 12.0 | 231 |
| NO (normally open) type | | | | | | |
| **AP12E4-15A** | Rc1/2 | 15 | 21 | 0.22 | 4.5 | - |
| **-20A** | Rc3/4 | 20 | - | - | 9.3 | 162 |
| **-25A** | Rc1 | 25 | - | - | 12.0 | 231 |

*1: Effective sectional area S and sonic conductance C are converted as S ≈ 5.0 x C.

## How to order

**AP1①E4 - 25A - 0 3 T A - AC200V**

- Model no.
- Ⓐ Actuation
- Ⓑ Port size *2
- Ⓒ Body/sealant combination
- Ⓓ Type of coil *3
- Ⓔ Junction box *4
- Ⓕ Other options *5
- Ⓖ Voltage *7, *8

| Symbol | | Descriptions | | Model no. AP11E4 | Model no. AP12E4 |
|---|---|---|---|---|---|
| **Ⓐ Actuation** | | | | | |
| 1 | | NC (normally closed) type | | ● | |
| 2 | | NO (normally open) type | | | ● |
| **Ⓑ Port size** | | | | | |
| 15A | | Rc1/2 | | ● | ● |
| 20A | | Rc3/4 | | ● | ● |
| 25A | | Rc1 | | ● | ● |
| **Ⓒ Body/sealant combination** | | | | | |
| | | Body | Valve sealant | O ring | Treatment | Remarks | | |
| 0 | Std. | Bronze | Nitrile rubber | Nitrile rubber | - | Air, water, kerosene, oil (up to 60˚C) | ● | ● |
| B | Option | Bronze | Fluoro rubber | Fluoro rubber | - | - | ● | ● |
| C | Option | Bronze | PTFE | Fluoro rubber | - | - | ● | ● |
| D | Option | Stainless steel | Nitrile rubber | Nitrile rubber | - | Air, water, kerosene, oil (up to 60˚C) | ● | ● |
| E | Option | Stainless steel | Fluoro rubber | Fluoro rubber | - | - | ● | ● |
| F | Option | Stainless steel | PTFE | PTFE | - | - | ● | ● |
| H | Option | Bronze | Nitrile rubber | Nitrile rubber | Oil free | Air, water, kerosene, oil (up to 60˚C) | ● | ● |
| J | Option | Bronze | Fluoro rubber | Fluoro rubber | Oil free | - | ● | ● |
| K | Option | Bronze | PTFE | Fluoro rubber | Oil free | - | ● | ● |
| L | Option | Stainless steel | Nitrile rubber | Nitrile rubber | Oil free | Air, water, kerosene, oil (up to 60˚C) | ● | ● |
| M | Option | Stainless steel | Fluoro rubber | Fluoro rubber | Oil free | - | ● | ● |
| N | Option | Stainless steel | PTFE | PTFE | Oil free | - | ● | ● |
| Refer to page 36 in the Introduction for details on the material combinations. | | | | | | | | |
| **Ⓓ Type of coil** | | | | | | | | |
| 3 | | Heat proof class B explosion proof coil d2G4 | | | | | ● | ● |
| 5 | | Heat proof class B diode integrated explosion proof coil d2G4 | | | | | ● | ● |
| **Ⓔ Junction box** | | | | | | | | |
| T | Std. | Conduit (G1/2) | | | | | ● | ● |
| L | Option | Pressure proof packing seal (G1/2) connection, cable OD ø7.5 to 8.4 | | | | | ● | ● |
| M | Option | Pressure proof packing seal (G1/2) connection, cable OD ø8.5 to 9.4 | | | | | ● | ● |
| **Ⓕ Other options** | | | | | | | | |
| Blank | Std. | No options | | | | | ● | ● |
| A | | Manual override (locking) | | | | | ● | |
| **Ⓖ Voltage** | | | | | | | | |
| AC100V | | 100 VAC 50/60 Hz, 110 VAC 60 Hz | | | | | ● | ● |
| AC200V | | 200 VAC 50/60 Hz, 220 VAC 60 Hz | | | | | ● | ● |

<Example of model number>

**AP11E4-25A-03TA-AC100V**
Series: AP11E4

Ⓐ Actuation : NC (normally closed) type
Ⓑ Port size : Rc1
Ⓒ Body/sealant combination
: Body - bronze, valve sealant - nitrile rubber
: O ring - nitrile rubber
Ⓓ Type of coil : Heat proof class B explosion proof coil d2G4
Ⓔ Junction box : Conduit (G1/2)
Ⓕ Other options : Manual override (locking)
Ⓖ Voltage : 100 VAC 50/60 Hz, 110 VAC 60 Hz

### ⚠ Note on model no. selection

*1: The combinations indicated with ● in the above table are available.
*2: G and NPT threads are used for piping port. Contact CKD for details.
*3: For the heat proof class B diode integrated coil, the AC power voltage is converted into a DC coil voltage by the diode.
*4: A pressure proof packing seal (G3/4) connection is also available. Contact CKD for more information. Note that the conduit connection (G3/4) is not available.
*5: When Ⓒ is C, F, K or N, the manual override (Ⓕ A) is not available.
*6: Tropicalization (rust-proof coating) is available as a measure against rust. Contact CKD for more information.
Note that the tropicalization is not available when the manual override option A is selected.
*7: 100 VAC coil is compatible with 100 VAC 50/60 Hz and 110 VAC 60 Hz, and 200 VAC coil is compatible with 200 VAC 50/60 Hz and 220 VAC 60 Hz.
The heat proof class B diode integrated explosion proof coil (Ⓓ 5) can be used with 100 VAC 50/60 Hz or 200 VAC 50/60 Hz.
*8: Other voltages available are as follows. Contact CKD for more information.
12, 24, 48, 110, 115, 120, 220, 240, 380, 400, 415, 440, 480, 500 VAC
110, 220 VAC (with diode); 6, 12, 24, 48, 100, 110, 200, 220 VDC

## Internal structure and parts list

● AP11E4 Series

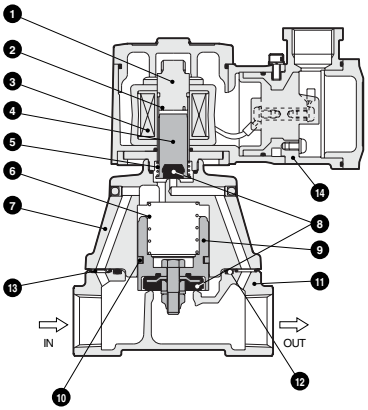


| No. | Parts name | Material | |
|---|---|---|---|
| 1 | Core assembly | SUS405 or equivalent, SUS316L, SUS403 *1 | Stainless steel |
| 2 | Shading coil | Cu (Ag for stainless steel body) | Copper (silver for stainless steel body) |
| 3 | Coil | —— | —— |
| 4 | Plunger | SUS405 or equivalent | Stainless steel |
| 5 | Plunger spring | SUS304 | Stainless steel |
| 6 | Valve spring | SUS304 | Stainless steel |
| 7 | Stuffing | CAC408 (SCS13) *2 | Bronze casting (stainless steel casting) |
| 8 | Valve sealant | NBR (FKM, PTFE) | Nitrile rubber (fluoro rubber, tetrafluoroethylene resin) |
| 9 | Valve assembly | C3604, SUS303, SUS304 (SUS303, SUS304) | Stainless steel, brass (stainless steel) |
| 10 | Piston ring | SUS304, PTFE | Stainless steel, tetrafluoroethylene resin |
| 11 | Body | CAC408 (SCS13) *2 | Bronze casting (stainless steel casting) |
| 12 | O ring | NBR (FKM, PTFE) | Nitrile rubber (fluoro rubber, tetrafluoroethylene resin) |
| 13 | Orifice plate | SUS304 (SUS303) | Stainless steel |
| 14 | Coil case | ADC12 | Aluminum die casting |

( ) shows options.
*1 When the body/sealant combination symbol is other than O and H, the material is SUS405 or equivalent, SUS316L, SUS430.
*2: For port size 8 (1/4) or 10 (3/8), the body stuffing material is C3771 (brass) as standard, and the orifice plate material is SUS303 (stainless steel) for both the standard and options.

● AP12E4 Series

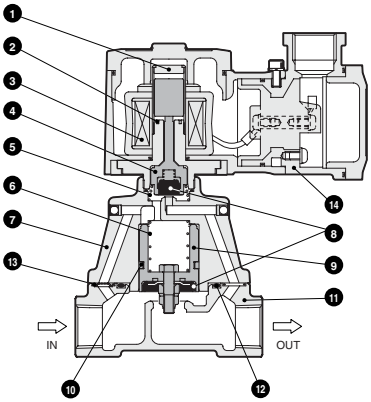


| No. | Parts name | Material | |
|---|---|---|---|
| 1 | Plunger/core assembly | SUS405 or equivalent, SUS316L, SUS304 | Stainless steel |
| 2 | Shading coil | Cu (Ag for stainless steel body) | Copper (silver for stainless steel body) |
| 3 | Coil | —— | —— |
| 4 | NO valve | POM (SUS303, PFA) | Acetal resin, nitrile rubber (stainless steel, perfluoroalkoxy resin) |
| 5 | Spring | SUS304 | Stainless steel |
| 6 | Valve spring | SUS304 | Stainless steel |
| 7 | Stuffing | CAC408 (SCS13) *1 | Bronze casting (stainless steel casting) |
| 8 | Valve sealant | NBR (FKM, PTFE) | Nitrile rubber (fluoro rubber, tetrafluoroethylene resin) |
| 9 | Main valve assembly | C3604, SUS303, SUS304 (SUS303, SUS304) | Stainless steel, brass (stainless steel) |
| 10 | Piston ring | SUS304, PTFE | Stainless steel, tetrafluoroethylene resin |
| 11 | Body | CAC408 (SCS13) *1 | Bronze casting (stainless steel casting) |
| 12 | O ring | NBR (FKM, PTFE) | Nitrile rubber (fluoro rubber, tetrafluoroethylene resin) |
| 13 | Orifice plate | SUS304 (SUS303) | Stainless steel |
| 14 | Coil case | ADC12 | Aluminum die casting |

( ) shows options.
*1: For port size 8 (1/4) or 10 (3/8), the body stuffing material is C3771 (brass) as standard, and the orifice plate material is SUS303 (stainless steel) for both the standard and options.

## Dimensions

● Conduit (G1/2) type
AP11E4 -*-**T
AP12E4

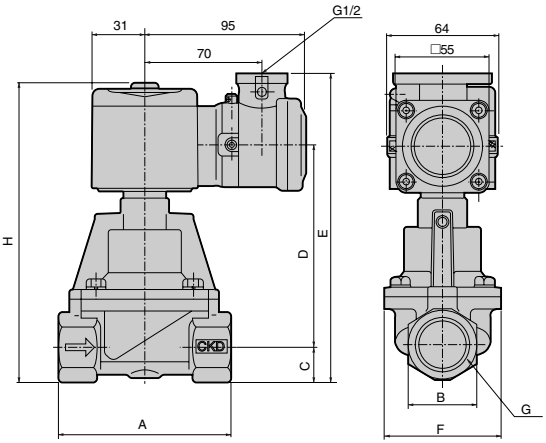


| Model no. | A | B | C | D | E | F | G | H |
|---|---|---|---|---|---|---|---|---|
| **AP11E4-15A-**T** | 90 | 29 | 14.5 | 94.5 | 152 | 57 | Rc1/2 | 147 |
| **AP11E4-20A-**T** | 100 | 35 | 17.5 | 103.5 | 164 | 65 | Rc3/4 | 159 |
| **AP11E4-25A-**T** | 110 | 44 | 22.0 | 118 | 183 | 76 | Rc1 | 178 |
| **AP12E4-15A-**T** | 90 | 29 | 14.5 | 98.5 | 156 | 57 | Rc1/2 | 151 |
| **AP12E4-20A-**T** | 100 | 35 | 17.5 | 107.5 | 168 | 65 | Rc3/4 | 163 |
| **AP12E4-25A-**T** | 110 | 44 | 22.0 | 122 | 187 | 76 | Rc1 | 182 |

## Optional dimensions

● Pressure proof packing seal (G1/2) connection type
AP11E4 -*-** L, M
AP12E4

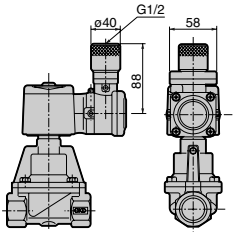


● Manual override (locking)
AP11E4-*-*** A

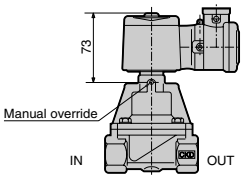

Explosion proof pilot operated 2 port solenoid valve
(general purpose valve)

# AP21E4/AP22E4 Series

- Pressure and explosion proof structure d2G4 (flame-proof grade 2, ignitability G4)
- NC (normally closed) type, NO (normally open) type
- Port size: Rc1 1/4 to Rc2, 32 to 50 flange ● Piston structure

RoHS CAD

## JIS symbol

● AP21E4:
NC (normally closed) type

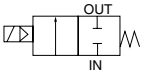


● AP22E4:
NO (normally open) type

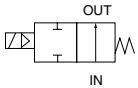


## Common specifications

| Item | AP21E4/AP22E4 |
|---|---|
| Working fluid | Air, water, kerosene, oil (50 mm²/s or less) |
| Working pressure differential range MPa | 0.05 to 1.2 (refer to max. working pressure differential in individual specifications.) |
| Max. working pressure MPa | 1.6 |
| Withstanding pressure (water) MPa | 3.2 |
| Fluid temperature ˚C | -10 to 60 (no freezing) |
| Ambient temperature ˚C | -10 to 50 |
| Heat proof class | B |
| Atmosphere | Outdoors/flammable etc. (flame-proof grade 1 to 2, ignitability G1 to G4) |
| Valve structure | Pilot operated poppet, piston structure |
| Valve seat leakage (Note 1) cm³/min. (ANR) | 1 or less (for PTFE sealant: 400 or less) (air) |
| Mounting attitude | Free (within working pressure differential range) |

Note 1: For AP21E4 (NC (normally closed) type), these values apply to pneumatic pressure 0.05 to 1.2 MPa, and for AP22E4 (NO (normally open) type), these apply to pneumatic pressure 0.05 to 0.5 MPa.

## Individual specifications

| Item / Model no. | Port size | Orifice (mm) | Min. working pressure diff. (MPa) | Max. working pressure diff. (MPa) Air AC | Air DC | Water, kerosene AC | Water, kerosene DC | Oil (50 mm²/s) AC | Oil (50 mm²/s) DC | Rated voltage | Apparent power (VA) Holding 50 Hz | Holding 60 Hz | Starting 50 Hz | Starting 60 Hz | Power consumption (W) AC 50 Hz /60 Hz | DC | Weight (kg) |
|---|---|---|---|---|---|---|---|---|---|---|---|---|---|---|---|---|---|
| NC (normally closed) type | | | | | | | | | | | | | | | | | |
| **AP21E4-32A** | Rc1 1/4 | 35 | 0.05 | 1.2 | 0.6 | 1.0 | 0.6 | 0.6 | 0.6 | 100 VAC 50/60 Hz<br>110 VAC 60 Hz<br>200 VAC 50/60 Hz<br>220 VAC 60 Hz | 18 | 15 | 29 | 24 | 8/7 | 11.6 | 4.0 |
| **-32F** | 32 flange | | | | | | | | | | | | | | | | 7.5 |
| **-40A** | Rc1 1/2 | 43 | | | | | | | | | | | | | | | 5.0 |
| **-40F** | 40 flange | | | | | | | | | | | | | | | | 8.5 |
| **-50A** | Rc2 | 53 | | | | | | | | | | | | | | | 6.5 |
| **-50F** | 50 flange | | | | | | | | | | | | | | | | 10.5 |
| NO (normally open) type | | | | | | | | | | | | | | | | | |
| **AP22E4-32A** | Rc1 1/4 | 35 | 0.05 | 0.5 | 0.5 | 0.5 | 0.5 | 0.5 | 0.5 | 100 VAC 50/60 Hz<br>110 VAC 60 Hz<br>200 VAC 50/60 Hz<br>220 VAC 60 Hz | 22 | 18 | 35 | 29 | 8.7<br>/6.7 | 15.5 | 4.0 |
| **-32F** | 32 flange | | | | | | | | | | | | | | | | 7.5 |
| **-40A** | Rc1 1/2 | 43 | | | | | | | | | | | | | | | 5.0 |
| **-40F** | 40 flange | | | | | | | | | | | | | | | | 8.5 |
| **-50A** | Rc2 | 53 | | | | | | | | | | | | | | | 6.5 |
| **-50F** | 50 flange | | | | | | | | | | | | | | | | 10.5 |

*1: Refer to DC column for the maximum working pressure differential of AP21E4 type coil with diode.
*2: Voltage fluctuation should be within -10 to +5% of the rated voltage.

## Flow characteristics

| Model no. | Port size | Orifice (mm) | Cv flow factor | Effective sectional area ($mm^2$) |
|---|---|---|---|---|
| NC (normally closed) type | | | | |
| **AP21E4-32A** | Rc1 1/4 | 35 | 25 | 460 |
| **AP21E4-32F** | 32 flange | | | |
| **AP21E4-40A** | Rc1 1/2 | 43 | 34 | 625 |
| **AP21E4-40F** | 40 flange | | | |
| **AP21E4-50A** | Rc2 | 53 | 53 | 975 |
| **AP21E4-50F** | 50 flange | | | |
| NO (normally open) type | | | | |
| **AP22E4-32A** | Rc1 1/4 | 35 | 25 | 460 |
| **AP22E4-32F** | 32 flange | | | |
| **AP22E4-40A** | Rc1 1/2 | 43 | 34 | 625 |
| **AP22E4-40F** | 40 flange | | | |
| **AP22E4-50A** | Rc2 | 53 | 53 | 975 |
| **AP22E4-50F** | 50 flange | | | |

## How to order

**AP2①E4 - 50F - 0 3 T A - AC100V**

- Model no.
- Ⓐ Actuation
- Ⓑ Port size *2 *3
- Ⓒ Body/sealant combination
- Ⓓ Type of coil *4
- Ⓔ Junction box *5
- Ⓕ Other options *6
- Ⓖ Voltage *8, *9

| Symbol | Descriptions | AP21E4 | AP22E4 |
|---|---|---|---|
| **Ⓐ Actuation** | | | |
| 1 | NC (normally closed) type | ● | |
| 2 | NO (normally open) type | | ● |
| **Ⓑ Port size** | | | |
| 32A | Rc1 1/4 | ● | ● |
| 32F | 32 flange | ● | ● |
| 40A | Rc1 1/2 | ● | ● |
| 40F | 40 flange | ● | ● |
| 50A | Rc2 | ● | ● |
| 50F | 50 flange | ● | ● |

**Ⓒ Body/sealant combination**

| | | Body | Valve sealant | O ring | Treatment | Remarks | | |
|---|---|---|---|---|---|---|---|---|
| 0 | Std. | Bronze | Nitrile rubber | Nitrile rubber | - | Air, water, kerosene, oil (up to 60˚C) | ● | ● |
| B | Option | | Fluoro rubber | Fluoro rubber | | - | ● | ● |
| C | | | PTFE | Fluoro rubber | | - | ● | ● |
| D | | Stainless steel | Nitrile rubber | Nitrile rubber | - | Air, water, kerosene, oil (up to 60˚C) | ● | ● |
| E | | | Fluoro rubber | Fluoro rubber | | - | ● | ● |
| F | | | PTFE | PTFE | | - | ● | ● |
| H | | Bronze | Nitrile rubber | Nitrile rubber | Oil free | Air, water, kerosene, oil (up to 60˚C) | ● | ● |
| J | | | Fluoro rubber | Fluoro rubber | | - | ● | ● |
| K | | | PTFE | Fluoro rubber | | - | ● | ● |
| L | | Stainless steel | Nitrile rubber | Nitrile rubber | | Air, water, kerosene, oil (up to 60˚C) | ● | ● |
| M | | | Fluoro rubber | Fluoro rubber | | - | ● | ● |
| N | | | PTFE | PTFE | | - | ● | ● |

Refer to page 36 in the Introduction for details on the material combinations.

| | | | | |
|---|---|---|---|---|
| **Ⓓ Type of coil** | | | | |
| 3 | | Heat proof class B explosion proof coil d2G4 | ● | ● |
| 5 | | Heat proof class B diode integrated explosion proof coil d2G4 | ● | ● |
| **Ⓔ Junction box** | | | | |
| T | Std. | Conduit (G1/2) | ● | ● |
| L | Option | Pressure proof packing seal (G1/2) connection, cable OD ø7.5 to 8.4 | ● | ● |
| M | | Pressure proof packing seal (G1/2) connection, cable OD ø8.5 to 9.4 | ● | ● |
| **Ⓕ Other options** | | | | |
| Blank | Std. | No options | ● | ● |
| A | | Manual override (locking) | ● | |
| **Ⓖ Voltage** | | | | |
| AC100V | | 100 VAC 50/60 Hz, 110 VAC 60 Hz | ● | ● |
| AC200V | | 200 VAC 50/60 Hz, 220 VAC 60 Hz | ● | ● |

### <Example of model number>

**AP21E4-50F-03TA-AC100V**
Series: AP21E4

- Ⓐ Actuation : NC (normally closed) type
- Ⓑ Port size : 50 flange
- Ⓒ Body/sealant combination
  - : Body - bronze, sealant - nitrile rubber
  - : O ring - nitrile rubber
- Ⓓ Type of coil : Heat proof class B explosion proof coil d2G4
- Ⓔ Junction box : Conduit (G1/2)
- Ⓕ Other options : Manual override (locking)
- Ⓖ Voltage : 100 VAC 50/60 Hz, 110 VAC 60 Hz

### ⚠ Note on model no. selection

*1: The combinations indicated with ● in the above table are available.
*2: The companion flange is JIS B2210 10K. (No flange is enclosed with the product, but must be purchased separately. )
*3: G and NPT threads are used for piping port. Contact CKD for details.
*4: For the heat proof class B diode integrated coil, the AC power voltage is converted into a DC coil voltage by the diode.
*5: A pressure proof packing seal (G3/4) connection is also available. Contact CKD for more information. Note that the conduit connection (G3/4) is not available.
*6: When Ⓒ is C, F, K or N, the manual override (Ⓕ A) is not available.
*7: Tropicalization (rust-proof coating) is available as a measure against rust. Contact CKD for more information.
Note that the tropicalization is not available when the manual override option A is selected.
*8: 100 VAC coil is compatible with 100 VAC 50/60 Hz and 110 VAC 60 Hz, and 200 VAC coil is compatible with 200 VAC 50/60 Hz and 220 VAC 60 Hz.
The heat proof class B diode integrated explosion proof coil (Ⓓ 5) can be used with 100 VAC 50/60 Hz or 200 VAC 50/60 Hz.
*9: Other voltages available are as follows. Contact CKD for more information.
12, 24, 48, 110, 115, 120, 220, 240, 380, 400, 415, 440, 480, 500 VAC
110, 220 VAC (with diode); 6, 12, 24, 48, 100, 110, 200, 220 VDC

## Internal structure and parts list

● AP21E4 Series

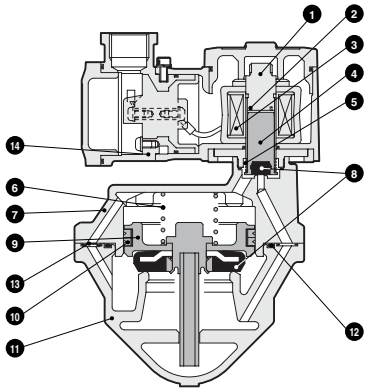


| No. | Parts name | Material | |
|---|---|---|---|
| 1 | Core assembly | SUS405 or equivalent, SUS316L, SUS403*1 | Stainless steel |
| 2 | Shading coil | Cu (Ag for stainless steel body) | Copper (silver for stainless steel body) |
| 3 | Coil | —— | —— |
| 4 | Plunger | SUS405 or equivalent | Stainless steel |
| 5 | Plunger spring | SUS304 | Stainless steel |
| 6 | Valve spring | SUS304 | Stainless steel |
| 7 | Stuffing | CAC408 (SCS13) | Bronze casting (stainless steel casting) |
| 8 | Valve sealant | NBR (FKM, PTFE) | Nitrile rubber (fluoro rubber, tetrafluoroethylene resin) |
| 9 | Main valve assembly | C3604, SUS303, SUS304 (SUS303, SUS304) | Stainless steel, brass (stainless steel) |
| 10 | Seal ring set | SUS304, PTFE | Stainless steel, tetrafluoroethylene resin |
| 11 | Body | CAC408 (SCS13) | Bronze casting (stainless steel casting) |
| 12 | O ring | NBR (FKM, PTFE) | Nitrile rubber (fluoro rubber, tetrafluoroethylene resin) |
| 13 | Orifice plate | SUS304 | Stainless steel |
| 14 | Coil case | ADC12 | Aluminum die casting |

( ) shows options.
*1 When the body/sealant combination symbol is other than O and H, the material is SUS405 or equivalent, SUS316L, SUS430.

● AP22E4 Series

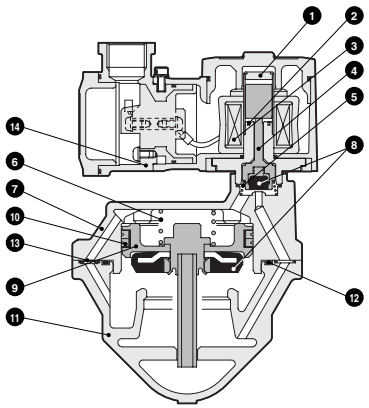


| No. | Parts name | Material | |
|---|---|---|---|
| 1 | Plunger/core assembly | SUS405 or equivalent, SUS316L, SUS304 | Stainless steel |
| 2 | Shading coil | Cu (Ag for stainless steel body) | Copper (silver for stainless steel body) |
| 3 | Coil | —— | —— |
| 4 | NO valve | POM, NBR (SUS303, PFA) | Acetal resin, nitrile rubber (stainless steel, perfluoroalkoxy resin) |
| 5 | Spring | SUS304 | Stainless steel |
| 6 | Valve spring | SUS304 | Stainless steel |
| 7 | Stuffing | CAC408 (SCS13) | Bronze casting (stainless steel casting) |
| 8 | Valve sealant | NBR (FKM, PTFE) | Nitrile rubber (fluoro rubber, tetrafluoroethylene resin) |
| 9 | Main valve assembly | C3604, SUS303, SUS304 (SUS303, SUS304) | Stainless steel, brass (stainless steel) |
| 10 | Seal ring set | SUS304, PTFE | Stainless steel, tetrafluoroethylene resin |
| 11 | Body | CAC408 (SCS13) | Bronze casting (stainless steel casting) |
| 12 | O ring | NBR (FKM, PTFE) | Nitrile rubber (fluoro rubber, tetrafluoroethylene resin) |
| 13 | Orifice plate | SUS304 | Stainless steel |
| 14 | Coil case | ADC12 | Aluminum die casting |

( ) shows options.

## Dimensions

● Conduit (G1/2) type (Rc screw-in type)
AP21E4
AP22E4 -32A/40A/50A-**T

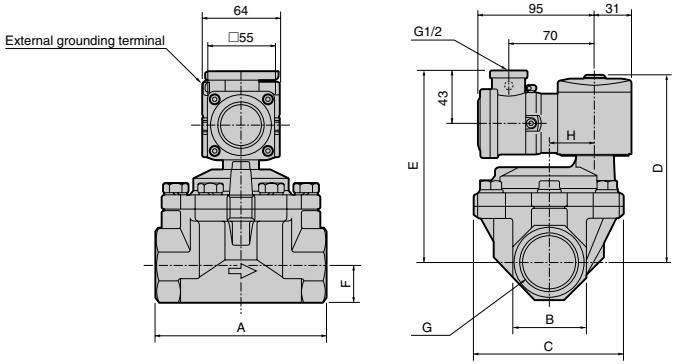


| Model no. | A | B | C | D | E | F | G | H |
|---|---|---|---|---|---|---|---|---|
| **AP21E4-32A-**T** | 125 | 54 | 112 | 147 | 152 | 27 | Rc1 1/4 | 32 |
| **AP21E4-40A-**T** | 140 | 60 | 122 | 153 | 158 | 30 | Rc1 1/2 | 38 |
| **AP21E4-50A-**T** | 160 | 74 | 132 | 161 | 166 | 37 | Rc2 | 45 |
| **AP22E4-32A-**T** | 125 | 54 | 112 | 151 | 156 | 27 | Rc1 1/4 | 32 |
| **AP22E4-40A-**T** | 140 | 60 | 122 | 157 | 162 | 30 | Rc1 1/2 | 38 |
| **AP22E4-50A-**T** | 160 | 74 | 132 | 165 | 170 | 37 | Rc2 | 45 |

● Conduit (G1/2) type (flange type)
AP21E4
AP22E4 -32F/40F/50F-**T

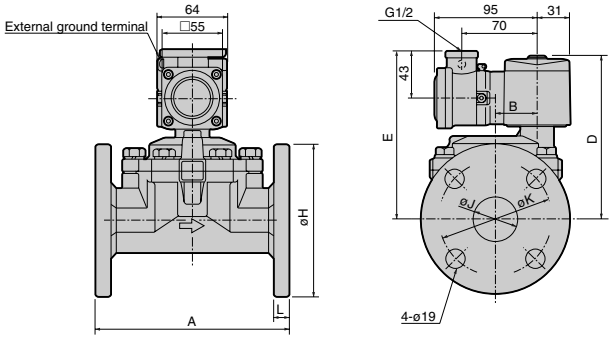


| Model no. | A | B | D | E | H | J | K | L |
|---|---|---|---|---|---|---|---|---|
| **AP21E4-32F-**T** | 170 | 32 | 147 | 152 | 135 | 36 | 100 | 12 |
| **AP21E4-40F-**T** | 180 | 38 | 153 | 158 | 140 | 42 | 105 | 14 |
| **AP21E4-50F-**T** | 180 | 45 | 161 | 166 | 155 | 53 | 120 | 14 |
| **AP22E4-32F-**T** | 170 | 32 | 151 | 156 | 135 | 36 | 100 | 12 |
| **AP22E4-40F-**T** | 180 | 38 | 157 | 162 | 140 | 42 | 105 | 14 |
| **AP22E4-50F-**T** | 180 | 45 | 165 | 170 | 155 | 53 | 120 | 14 |

## Optional dimensions

● Pressure proof packing seal (G1/2) connection type (Rc screw-in type)
AP21E4
AP22E4 -32A/40A/50A-** L, M

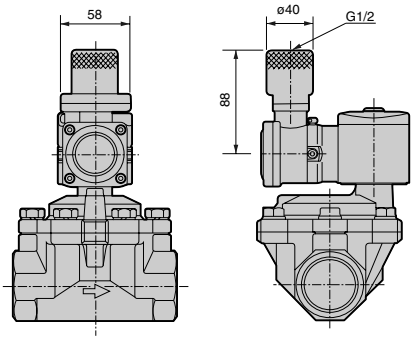


● Pressure proof packing seal (G1/2) connection type (flange type)
AP21E4
AP22E4 -32F/40F/50F-** L, M

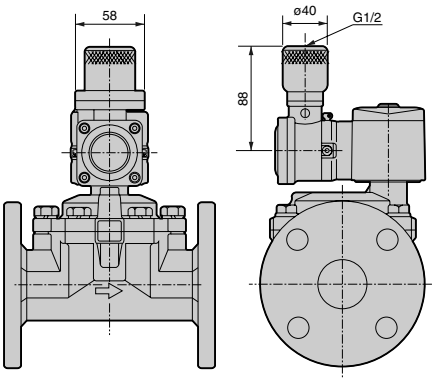


● Manual override (locking) (Rc screw-in type)
AP21E4-32A/40A/50A-*** A

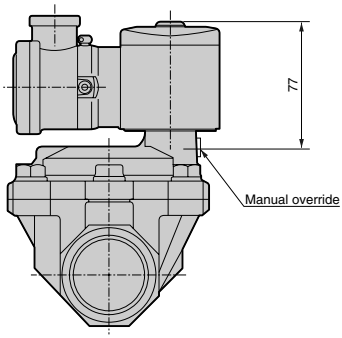


● Manual override (locking) (flange type)
AP21E4-32F/40F/50F-*** A

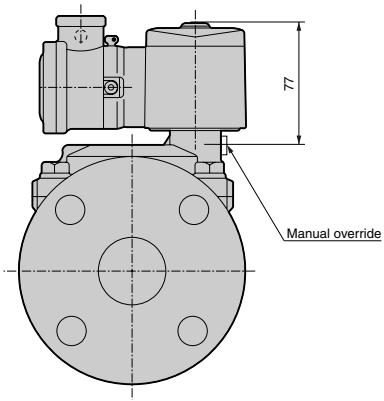

Explosion proof pilot operated 2 port solenoid valve
(general purpose valve)

# AD11E4/AD12E4 Series

- Pressure and explosion proof structure d2G4 (flame-proof grade 2, ignitability G4)
- NC (normally closed) type, NO (normally open) type
- Port size: Rc1/2 to Rc1 ● Diaphragm structure

RoHS CAD

## JIS symbol

● AD11E4:
NC (normally closed) type

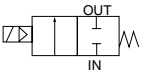


● AD12E4:
NO (normally open) type

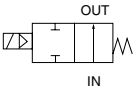


## Common specifications

| Item | AD11E4/AD12E4 |
|---|---|
| Working fluid | Air, water, kerosene, oil (50 mm²/s or less) |
| Working pressure differential range MPa | 0.02 to 1 (refer to max. working pressure differential in individual specifications.) |
| Max. working pressure MPa | 2 |
| Withstanding pressure (water) MPa | 8 |
| Fluid temperature ˚C | -10 to 60 (no freezing) |
| Ambient temperature ˚C | -10 to 50 |
| Heat proof class | B |
| Atmosphere | Outdoors/flammable etc. (flame-proof grade 1 to 2, ignitability G1 to G4) |
| Valve structure | Pilot operated poppet, diaphragm structure |
| Valve seat leakage (Note 1) cm³/min. (ANR) | 0.2 or less (air) |
| Mounting attitude | Free (within working pressure differential range) |

Note 1: For AD11E4 (NC (normally closed) type), these values apply to pneumatic pressure 0.02 to 1.0 MPa, and for AD12E4 (NO (normally open) type), these apply to pneumatic pressure 0.02 to 0.5 MPa.

## Individual specifications

| Item / Model no. | Port size | Orifice (mm) | Min. working pressure diff. (MPa) | Max. working pressure diff. (MPa) Air AC | Air DC | Water, kerosene AC | Water, kerosene DC | Oil (50 mm²/s) AC | Oil (50 mm²/s) DC | Rated voltage | Apparent power (VA) Holding 50 Hz | Holding 60 Hz | Starting 50 Hz | Starting 60 Hz | Power consumption (W) AC 50/60 Hz | DC | Weight (kg) |
|---|---|---|---|---|---|---|---|---|---|---|---|---|---|---|---|---|---|
| NC (normally closed) type | | | | | | | | | | | | | | | | | |
| **AD11E4-15A** | Rc1/2 | 15 | 0.02 | 1 | 0.6 | 0.7 | 0.6 | 0.6 | 0.6 | 100 VAC 50/60 Hz 110 VAC 60 Hz 200 VAC 50/60 Hz 220 VAC 60 Hz | 18 | 15 | 29 | 24 | 8/7 | 11.6 | 1.7 |
| **-20A** | Rc3/4 | 20 | | | | | | | | | | | | | | | 1.9 |
| **-25A** | Rc1 | 25 | | | | | | | | | | | | | | | 2.3 |
| NO (normally open) type | | | | | | | | | | | | | | | | | |
| **AD12E4-15A** | Rc1/2 | 15 | 0.02 | 0.5 | 0.5 | 0.5 | 0.5 | 0.5 | 0.5 | 100 VAC 50/60 Hz 110 VAC 60 Hz 200 VAC 50/60 Hz 220 VAC 60 Hz | 22 | 18 | 35 | 29 | 8.7/ 6.7 | 15.5 | 1.7 |
| **-20A** | Rc3/4 | 20 | | | | | | | | | | | | | | | 1.9 |
| **-25A** | Rc1 | 25 | | | | | | | | | | | | | | | 2.3 |

Note 1: Refer to DC column for the maximum working pressure differential of AD11E4 type coil with diode.
Note 2: Voltage fluctuation should be within -10 to +5% of the rated voltage.

## Flow characteristics

| Model no. | Port size | Orifice (mm) | Flow characteristics C [dm³/(s·bar)] | b | Cv flow factor | S (mm²) |
|---|---|---|---|---|---|---|
| NC (normally closed) type | | | | | | |
| **AD11E4-15A** | Rc1/2 | 15 | 21 | 0.22 | 4.5 | - |
| **-20A** | Rc3/4 | 20 | - | - | 9.3 | 162 |
| **-25A** | Rc1 | 25 | - | - | 12.0 | 231 |
| NO (normally open) type | | | | | | |
| **AD12E4-15A** | Rc1/2 | 15 | 21 | 0.22 | 4.5 | - |
| **-20A** | Rc3/4 | 20 | - | - | 9.3 | 162 |
| **-25A** | Rc1 | 25 | - | - | 12.0 | 231 |

*1: Effective sectional area S and sonic conductance C are converted as S = 5.0 × C.

## How to order

**AD1①E4 - 20A - 0 3 T A - AC100V**

- Model no.
- Ⓐ Actuation
- Ⓑ Port size *2
- Ⓒ Body/sealant combination
- Ⓓ Type of coil *3
- Ⓔ Junction box *4
- Ⓕ Other options
- Ⓖ Voltage *6 *7

| Symbol | Descriptions | AD11E4 | AD12E4 |
|---|---|---|---|
| **Ⓐ Actuation** | | | |
| 1 | NC (normally closed) type | ● | |
| 2 | NO (normally open) type | | ● |
| **Ⓑ Port size** | | | |
| 15A | Rc1/2 | ● | ● |
| 20A | Rc3/4 | ● | ● |
| 25A | Rc1 | ● | ● |

**Ⓒ Body/sealant combination**

| | | Body | Sealant | Treatment | Remarks | | |
|---|---|---|---|---|---|---|---|
| 0 | Std. | Bronze | Nitrile rubber | - | Air, water, kerosene, oil (up to 60˚C) | ● | ● |
| B | Option | | Fluoro rubber | | - | ● | ● |
| D | | Stainless steel | Nitrile rubber | - | Air, water, kerosene, oil (up to 60˚C) | ● | ● |
| E | | | Fluoro rubber | | - | ● | ● |
| H | | Bronze | Nitrile rubber | Oil free | Air, water, kerosene, oil (up to 60˚C) | ● | ● |
| J | | | Fluoro rubber | | - | ● | ● |
| L | | Stainless steel | Nitrile rubber | | Air, water, kerosene, oil (up to 60˚C) | ● | ● |
| M | | | Fluoro rubber | | - | ● | ● |

Refer to page 36 in the Introduction for details on the material combinations.

| | | | | |
|---|---|---|---|---|
| **Ⓓ Type of coil** | | | | |
| 3 | | Heat proof class B explosion proof coil d2G4 | ● | ● |
| 5 | | Heat proof class B diode integrated explosion proof coil d2G4 | ● | ● |
| **Ⓔ Junction box** | | | | |
| T | Std. | Conduit (G1/2) | ● | ● |
| L | Option | Pressure proof packing seal (G1/2) connection, cable OD ø7.5 to 8.4 | ● | ● |
| M | | Pressure proof packing seal (G1/2) connection, cable OD ø8.5 to 9.4 | ● | ● |
| **Ⓕ Other options** | | | | |
| Blank | Std. | No options | ● | ● |
| A | | Manual override (locking) | ● | |
| **Ⓖ Voltage** | | | | |
| AC100V | | 100 VAC 50/60 Hz, 110 VAC 60 Hz | ● | ● |
| AC200V | | 200 VAC 50/60 Hz, 220 VAC 60 Hz | ● | ● |



### <Example of model number>

**AD11E4-20A-03TA-AC100V**
Series: AD11E4

- Ⓐ Actuation : NC (normally closed) type
- Ⓑ Port size : Rc3/4
- Ⓒ Body/sealant combination
  : Body - bronze, sealant - nitrile rubber
- Ⓓ Type of coil : Heat proof class B explosion proof coil d2G4
- Ⓔ Junction box : Conduit (G1/2)
- Ⓕ Other options : Manual override (locking)
- Ⓖ Voltage : 100 VAC 50/60 Hz, 110 VAC 60 Hz

### ⚠ Note on model no. selection

*1: The combinations indicated with ● in the above table are available.
*2: G and NPT threads are used for piping port. Contact CKD for details.
*3: For the heat proof class B diode integrated coil, the AC power voltage is converted into a DC coil voltage by the diode.
*4: A pressure proof packing seal (G3/4) connection is also available. Contact CKD for more information. Note that the conduit connection (G3/4) is not available.
*5: Tropicalization (rust-proof coating) is available as a measure against rust. Contact CKD for more information.
Note that the tropicalization is not available when the manual override option A is selected.
*6: 100 VAC coil is compatible with 100 VAC 50/60 Hz and 110 VAC 60 Hz, and 200 VAC coil is compatible with 200 VAC 50/60 Hz and 220 VAC 60 Hz.
The heat proof class B diode integrated explosion proof coil (Ⓓ 5) can be used with 100 VAC 50/60 Hz or 200 VAC 50/60 Hz.
*7: Other voltages available are as follows. Contact CKD for more information.
12, 24, 48, 110, 115, 120, 220, 240, 380, 400, 415, 440, 480, 500 VAC
110, 220 VAC (with diode); 6, 12, 24, 48, 100, 110, 200, 220 VDC

## Internal structure and parts list

● AD11E4 Series

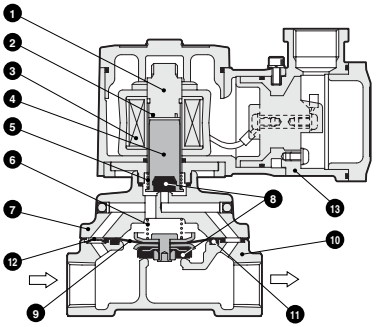


| No. | Parts name | Material | |
|---|---|---|---|
| 1 | Core assembly | SUS405 or equivalent, SUS316L, SUS403*1 | Stainless steel |
| 2 | Shading coil | Cu (Ag for stainless steel body) | Copper (silver for stainless steel body) |
| 3 | Coil | —— | —— |
| 4 | Plunger | SUS405 or equivalent | Stainless steel |
| 5 | Plunger spring | SUS304 | Stainless steel |
| 6 | Valve spring | SUS304 | Stainless steel |
| 7 | Stuffing | CAC408 (SCS13) *2 | Bronze casting (stainless steel casting) |
| 8 | Sealant | NBR (FKM) | Nitrile rubber (fluoro rubber) |
| 9 | Diaphragm assembly | SUS303, SUS304, NBR (SUS303, SUS304, FKM) | Stainless steel, nitrile rubber (stainless steel, fluoro rubber) |
| 10 | Body | CAC408 (SCS13) *3 | Bronze casting (stainless steel casting) |
| 11 | O ring | NBR (FKM) | Nitrile rubber (fluoro rubber) |
| 12 | Orifice plate | SUS304 | Stainless steel |
| 13 | Coil case | ADC12 | Aluminum die casting |

( ) shows options.
*1 When the body/sealant combination symbol is other than O and H, the material is SUS405 or equivalent, SUS316L, SUS430.
*2: There is no stuffing for port size 8 (1/4) or 10 (3/8).
*3: For port size 8 (1/4) or 10 (3/8), the standard body material is brass (C3771).

● AD12E4 Series

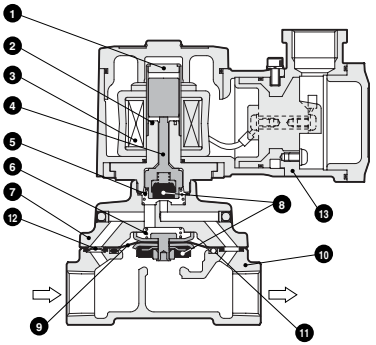


| No. | Parts name | Material | |
|---|---|---|---|
| 1 | Plunger/core assembly | SUS405 or equivalent, SUS316L, SUS304 | Stainless steel |
| 2 | Shading coil | Cu (Ag for stainless steel body) | Copper (silver for stainless steel body) |
| 3 | Coil | —— | —— |
| 4 | NO valve | POM, NBR (SUS303, PFA) | Acetal resin, nitrile rubber (stainless steel, perfluoroalkoxy resin) |
| 5 | Spring | SUS304 | Stainless steel |
| 6 | Valve spring | SUS304 | Stainless steel |
| 7 | Stuffing | CAC408 (SCS13) | Bronze casting (stainless steel casting) |
| 8 | Sealant | NBR (FKM) | Nitrile rubber (fluoro rubber) |
| 9 | Diaphragm assembly | SUS303, SUS304, NBR (SUS303, SUS304, FKM) | Stainless steel, nitrile rubber (stainless steel, fluoro rubber) |
| 10 | Body | CAC408 (SCS13) | Bronze casting (stainless steel casting) |
| 11 | O ring | NBR (FKM) | Nitrile rubber (fluoro rubber) |
| 12 | Orifice plate | SUS304 | Stainless steel |
| 13 | Coil case | ADC12 | Aluminum die casting |

( ) shows options.

## Dimensions and optional dimensions

● Conduit (G1/2) type
AD11E4 / AD12E4 -15A/20A/25A-** T

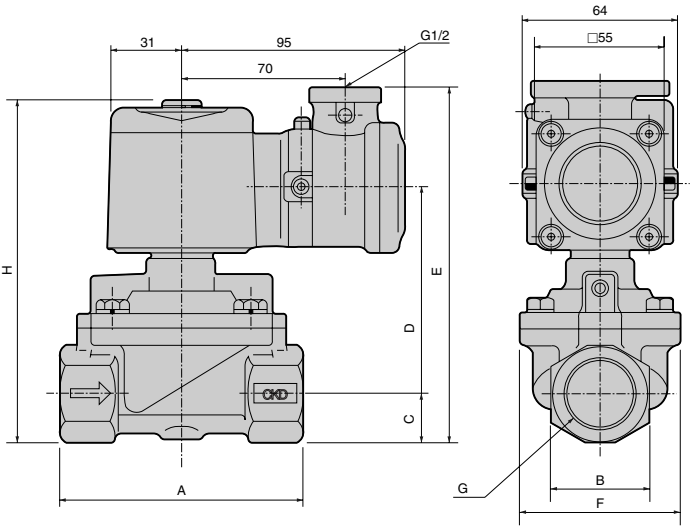


| Model no. | A | B | C | D | E | F | G | H |
|---|---|---|---|---|---|---|---|---|
| **AD11E4-15A-**T** | 90 | 29 | 14.5 | 75.5 | 133 | 57 | Rc1/2 | 128 |
| **AD11E4-20A-**T** | 100 | 35 | 17.5 | 81.5 | 142 | 65 | Rc3/4 | 137 |
| **AD11E4-25A-**T** | 110 | 44 | 22.0 | 87 | 152 | 76 | Rc1 | 147 |
| **AD12E4-15A-**T** | 90 | 29 | 14.5 | 80.5 | 138 | 57 | Rc1/2 | 133 |
| **AD12E4-20A-**T** | 100 | 35 | 17.5 | 86.5 | 147 | 65 | Rc3/4 | 142 |
| **AD12E4-25A-**T** | 110 | 44 | 22.0 | 92 | 157 | 76 | Rc1 | 152 |

● Pressure proof packing seal (G1/2) connection type
AD11E4 / AD12E4 -15A/20A/25A-** L, M

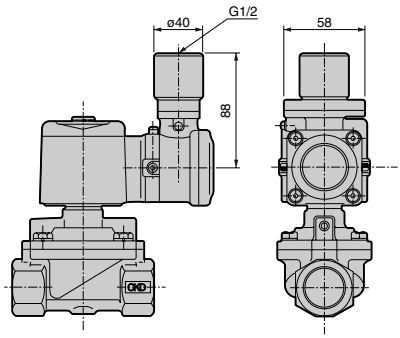


● Manual override (locking)
AD11E4-15A/20A/25A-*** A

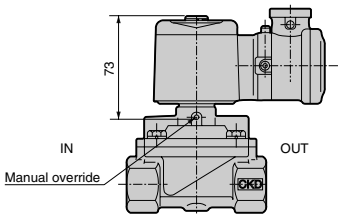

Explosion proof pilot operated 2 port solenoid valve
(general purpose valve)

# AD21E4/AD22E4 Series

- Pressure and explosion proof structure d2G4 (flame-proof grade 2, ignitability G4)
- NC (normally closed) type, NO (normally open) type
- Port size: Rc1 1/4 to Rc2, 32 to 50 flange ● Diaphragm structure

RoHS CAD

## JIS symbol

● AD21E4:
NC (normally closed) type

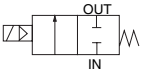


● AD22E4:
NO (normally open) type

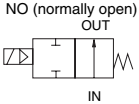


## Common specifications

| Item | AD21E4/AD22E4 |
|---|---|
| Working fluid | Air, water, kerosene, oil (50 mm²/s or less) |
| Working pressure differential range MPa | 0.02 to 0.7 (refer to max. working pressure differential in individual specifications.) |
| Max. working pressure MPa | 1 |
| Withstanding pressure (water) MPa | 3.2 |
| Fluid temperature ˚C | -10 to 60 (no freezing) |
| Ambient temperature ˚C | -10 to 50 |
| Heat proof class | B |
| Atmosphere | Outdoors/flammable etc. (flame-proof grade 1 to 2, ignitability G1 to G4) |
| Valve structure | Pilot operated poppet, diaphragm structure |
| Valve seat leakage (Note 1) cm³/min. (ANR) | 1 or less (air) |
| Mounting attitude | Free (within working pressure differential range) |

Note 1: For AD21E4 (NC (normally closed) type), these values apply to pneumatic pressure 0.02 to 0.7 MPa, and for AD22E4 (NO (normally open) type), these apply to pneumatic pressure 0.02 to 0.5 MPa.

## Individual specifications

| Item / Model no. | Port size | Orifice (mm) | Min. working pressure diff. (MPa) | Max. working pressure diff. (MPa) Air AC | Air DC | Water, kerosene AC | Water, kerosene DC | Oil (50 mm²/s) AC | Oil (50 mm²/s) DC | Rated voltage | Apparent power (VA) Holding 50 Hz | Holding 60 Hz | Starting 50 Hz | Starting 60 Hz | Power consumption (W) AC 50/60 Hz | DC | Weight (kg) |
|---|---|---|---|---|---|---|---|---|---|---|---|---|---|---|---|---|---|
| NC (normally closed) type | | | | | | | | | | | | | | | | | |
| **AD21E4-32A** | Rc1 1/4 | 35 | 0.02 | 0.7 | 0.6 | 0.7 | 0.6 | 0.6 | 0.6 | 100 VAC 50/60 Hz 110 VAC 60 Hz 200 VAC 50/60 Hz 220 VAC 60 Hz | 18 | 15 | 29 | 24 | 8/7 | 11.6 | 4.0 |
| **-32F** | 32 flange | | | | | | | | | | | | | | | | 7.5 |
| **-40A** | Rc1 1/2 | 43 | | | | | | | | | | | | | | | 5.0 |
| **-40F** | 40 flange | | | | | | | | | | | | | | | | 8.5 |
| **-50A** | Rc2 | 53 | | | | | | | | | | | | | | | 6.5 |
| **-50F** | 50 flange | | | | | | | | | | | | | | | | 10.5 |
| NO (normally open) type | | | | | | | | | | | | | | | | | |
| **AD22E4-32A** | Rc1 1/4 | 35 | 0.02 | 0.5 | 0.5 | 0.5 | 0.5 | 0.5 | 0.5 | 100 VAC 50/60 Hz 110 VAC 60 Hz 200 VAC 50/60 Hz 220 VAC 60 Hz | 22 | 18 | 35 | 29 | 8.7 /6.7 | 15.5 | 4.0 |
| **-32F** | 32 flange | | | | | | | | | | | | | | | | 7.5 |
| **-40A** | Rc1 1/2 | 43 | | | | | | | | | | | | | | | 5.0 |
| **-40F** | 40 flange | | | | | | | | | | | | | | | | 8.5 |
| **-50A** | Rc2 | 53 | | | | | | | | | | | | | | | 6.5 |
| **-50F** | 50 flange | | | | | | | | | | | | | | | | 10.5 |

*1: Refer to DC column for the maximum working pressure differential of AD21E4 type coil with diode.
*2: Voltage fluctuation should be within -10 to +5% of the rated voltage.

## Flow characteristics

| Model no. | Port size | Orifice (mm) | Cv flow factor | Effective sectional area ($mm^2$) |
|---|---|---|---|---|
| NC (normally closed) type | | | | |
| **AD21E4-32A** | Rc1 1/4 | 35 | 25 | 460 |
| **AP21E4-32F** | 32 flange | | | |
| **AP21E4-40A** | Rc1 1/2 | 43 | 34 | 625 |
| **AP21E4-40F** | 40 flange | | | |
| **AP21E4-50A** | Rc2 | 53 | 53 | 975 |
| **AP21E4-50F** | 50 flange | | | |
| NO (normally open) type | | | | |
| **AD22E4-32A** | Rc1 1/4 | 35 | 25 | 460 |
| **AP22E4-32F** | 32 flange | | | |
| **AP22E4-40A** | Rc1 1/2 | 43 | 34 | 625 |
| **AP22E4-40F** | 40 flange | | | |
| **AP22E4-50A** | Rc2 | 53 | 53 | 975 |
| **AP22E4-50F** | 50 flange | | | |

## How to order

**AD2①E4 - 40F - 0 3 T A - AC100V**

- Model no.
- Ⓐ Actuation
- Ⓑ Port size *2 *3
- Ⓒ Body/sealant combination
- Ⓓ Type of coil *4
- Ⓔ Junction box *5
- Ⓕ Other options
- Ⓖ Voltage *7 *8

| Symbol | Descriptions | AD21E4 | AD22E4 |
|---|---|---|---|
| **Ⓐ Actuation** | | | |
| 1 | NC (normally closed) type | ● | |
| 2 | NO (normally open) type | | ● |
| **Ⓑ Port size** | | | |
| 32A | Rc1 1/4 | ● | ● |
| 32F | 32 flange | ● | ● |
| 40A | Rc1 1/2 | ● | ● |
| 40F | 40 flange | ● | ● |
| 50A | Rc2 | ● | ● |
| 50F | 50 flange | ● | ● |

**Ⓒ Body/sealant combination**

| | | Body | Sealant | Treatment | Remarks | | |
|---|---|---|---|---|---|---|---|
| 0 | Std. | Bronze | Nitrile rubber | - | Air, water, kerosene, oil (up to 60˚C) | ● | ● |
| B | Option | | Fluoro rubber | | - | ● | ● |
| D | | Stainless steel | Nitrile rubber | - | Air, water, kerosene, oil (up to 60˚C) | ● | ● |
| E | | | Fluoro rubber | | - | ● | ● |
| H | | Bronze | Nitrile rubber | Oil free | Air, water, kerosene, oil (up to 60˚C) | ● | ● |
| J | | | Fluoro rubber | | - | ● | ● |
| L | | Stainless steel | Nitrile rubber | | Air, water, kerosene, oil (up to 60˚C) | ● | ● |
| M | | | Fluoro rubber | | - | ● | ● |

Refer to page 36 in the Introduction for details on the material combinations.

| Symbol | Descriptions | AD21E4 | AD22E4 |
|---|---|---|---|
| **Ⓓ Type of coil** | | | |
| 3 | Heat proof class B explosion proof coil d2G4 | ● | ● |
| 5 | Heat proof class B diode integrated explosion proof coil d2G4 | ● | ● |

| | | | | |
|---|---|---|---|---|
| **Ⓔ Junction box** | | | | |
| T | Std. | Conduit (G1/2) | ● | ● |
| L | Option | Pressure proof packing seal (G1/2) connection, cable OD ø7.5 to 8.4 | ● | ● |
| M | | Pressure proof packing seal (G1/2) connection, cable OD ø8.5 to 9.4 | ● | ● |
| **Ⓕ Other options** | | | | |
| Blank | Std. | No options | ● | ● |
| A | | Manual override (locking) | ● | |
| **Ⓖ Voltage** | | | | |
| AC100V | | 100 VAC 50/60 Hz, 110 VAC 60 Hz | ● | ● |
| AC200V | | 200 VAC 50/60 Hz, 220 VAC 60 Hz | ● | ● |

### <Example of model number>

**AD21E4-40F-03TA-AC100V**
Series: AD21E4

Ⓐ Actuation : NC (normally closed) type
Ⓑ Port size : 40 flange
Ⓒ Body/sealant combination
: Body - bronze, sealant - nitrile rubber
Ⓓ Type of coil : Heat proof class B explosion proof coil d2G4
Ⓔ Junction box : Conduit (G1/2)
Ⓕ Other options : Manual override (locking)
Ⓖ Voltage : 100 VAC 50/60 Hz, 110 VAC 60 Hz

### ⚠ Note on model no. selection

*1: The combinations indicated with ● in the above table are available.
*2: The companion flange is JIS B2210 10K. (No flange is enclosed with the product, but must be purchased separately. )
*3: G and NPT threads are used for piping port. Contact CKD for details.
*4: For the heat proof class B diode integrated coil, the AC power voltage is converted into a DC coil voltage by the diode.
*5: A pressure proof packing seal (G3/4) connection is also available. Contact CKD for more information. Note that the conduit connection (G3/4) is not available.
*6: Tropicalization (rust-proof coating) is available as a measure against rust. Contact CKD for more information.
Note that the tropicalization is not available when the manual override option A is selected.
*7: 100 VAC coil is compatible with 100 VAC 50/60 Hz and 110 VAC 60 Hz, and 200 VAC coil is compatible with 200 VAC 50/60 Hz and 220 VAC 60 Hz.
The heat proof class B diode integrated explosion proof coil (Ⓓ 5) can be used with 100 VAC 50/60 Hz or 200 VAC 50/60 Hz.
*8: Other voltages available are as follows. Contact CKD for more information.
12, 24, 48, 110, 115, 120, 220, 240, 380, 400, 415, 440, 480, 500 VAC
110, 220 VAC (with diode)
6, 12, 24, 48, 100, 110, 200, 220 VDC

## Internal structure and parts list

● AD21E4 Series

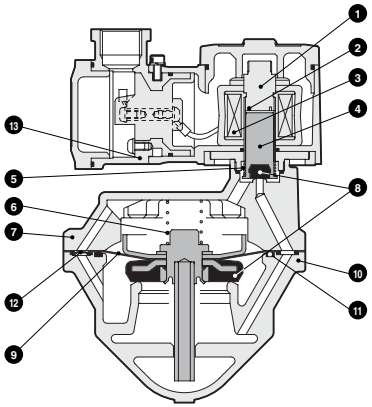


| No. | Parts name | Material | |
|---|---|---|---|
| 1 | Core assembly | SUS405 or equivalent, SUS316L, SUS403*1 | Stainless steel |
| 2 | Shading coil | Cu (Ag for stainless steel body) | Copper (silver for stainless steel body) |
| 3 | Coil | —— | —— |
| 4 | Plunger | SUS405 or equivalent | Stainless steel |
| 5 | Plunger spring | SUS304 | Stainless steel |
| 6 | Valve spring | SUS304 | Stainless steel |
| 7 | Stuffing | CAC408 (SCS13) | Bronze casting (stainless steel casting) |
| 8 | Sealant | NBR (FKM) | Nitrile rubber (fluoro rubber) |
| 9 | Diaphragm assembly | SUS303, SUS304, NBR (SUS303, SUS304, FKM) | Stainless steel, nitrile rubber (stainless steel, fluoro rubber) |
| 10 | Body | CAC408 (SCS13) | Bronze casting (stainless steel casting) |
| 11 | O ring | NBR (FKM) | Nitrile rubber (fluoro rubber) |
| 12 | Orifice plate | SUS304 | Stainless steel |
| 13 | Coil case | ADC12 | Aluminum die casting |

( ) shows options.
*1 When the body/sealant combination symbol is other than O and H, the material is SUS405 or equivalent, SUS316L, SUS430.

● AD22E4 Series

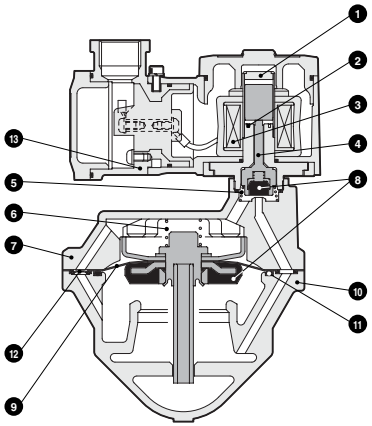


| No. | Parts name | Material | |
|---|---|---|---|
| 1 | Plunger/core assembly | SUS405 or equivalent, SUS316L, SUS304 | Stainless steel |
| 2 | Shading coil | Cu (Ag for stainless steel body) | Copper (silver for stainless steel body) |
| 3 | Coil | —— | —— |
| 4 | NO valve | POM, NBR (SUS303, PFA) | Acetal resin, nitrile rubber (stainless steel, perfluoroalkoxy resin) |
| 5 | Spring | SUS304 | Stainless steel |
| 6 | Valve spring | SUS304 | Stainless steel |
| 7 | Stuffing | CAC408 (SCS13) | Bronze casting (stainless steel casting) |
| 8 | Sealant | NBR (FKM) | Nitrile rubber (fluoro rubber) |
| 9 | Diaphragm assembly | SUS303, SUS304, NBR (SUS303, SUS304, FKM) | Stainless steel, nitrile rubber (stainless steel, fluoro rubber) |
| 10 | Body | CAC408 (SCS13) | Bronze casting (stainless steel casting) |
| 11 | O ring | NBR (FKM) | Nitrile rubber (fluoro rubber) |
| 12 | Orifice plate | SUS304 | Stainless steel |
| 13 | Coil case | ADC12 | Aluminum die casting |

( ) shows options.

## Dimensions

● Conduit (G1/2) type (Rc screw-in type)
AD21E4-32A/40A/50A-**T
AD22E4

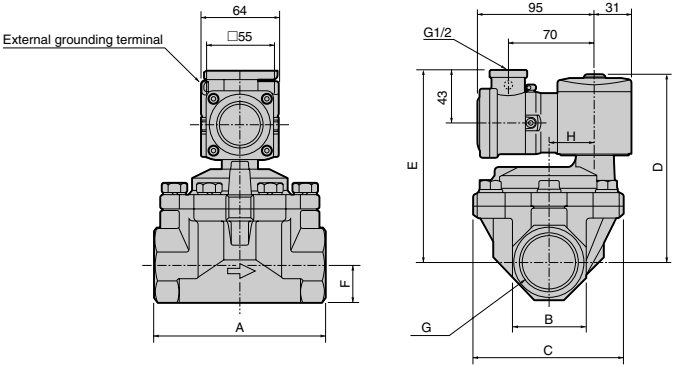


| Model no. | A | B | C | D | E | F | G | H |
|---|---|---|---|---|---|---|---|---|
| AD21E4-32A-**T | 125 | 54 | 112 | 147.5 | 152.5 | 27 | Rc1 1/4 | 32 |
| AD21E4-40A-**T | 140 | 60 | 122 | 153.5 | 158.5 | 30 | Rc1 1/2 | 38 |
| AD21E4-50A-**T | 160 | 74 | 132 | 161.5 | 166.5 | 37 | Rc2 | 45 |
| AD22E4-32A-**T | 125 | 54 | 112 | 151.5 | 156.5 | 27 | Rc1 1/4 | 32 |
| AD22E4-40A-**T | 140 | 60 | 122 | 157.5 | 162.5 | 30 | Rc1 1/2 | 38 |
| AD22E4-50A-**T | 160 | 74 | 132 | 165.5 | 170.5 | 37 | Rc2 | 45 |

● Conduit (G1/2) type (flange type)
AD21E4-32F/40F/50F-**T
AD22E4

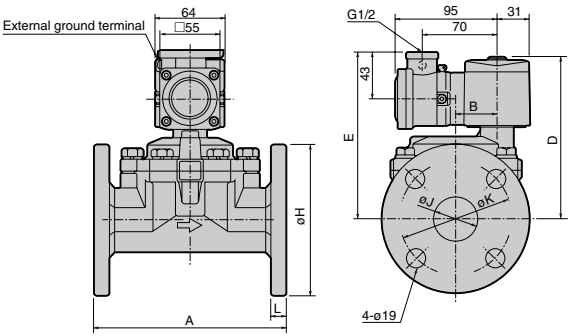


| Model no. | A | B | D | E | H | J | K | L |
|---|---|---|---|---|---|---|---|---|
| AD21E4-32F-**T | 170 | 32 | 147.5 | 152.5 | 135 | 36 | 100 | 12 |
| AD21E4-40F-**T | 180 | 38 | 153.5 | 158.5 | 140 | 42 | 105 | 14 |
| AD21E4-50F-**T | 180 | 45 | 161.5 | 166.5 | 155 | 53 | 120 | 14 |
| AD22E4-32F-**T | 170 | 32 | 151.5 | 156.5 | 135 | 36 | 100 | 12 |
| AD22E4-40F-**T | 180 | 38 | 157.5 | 162.5 | 140 | 42 | 105 | 14 |
| AD22E4-50F-**T | 180 | 45 | 165.5 | 170.5 | 155 | 53 | 120 | 14 |

## Optional dimensions

● Pressure proof packing seal (G1/2) connection type (Rc screw-in type)
AD21E4 / AD22E4 -32A/40A/50A-** L, M

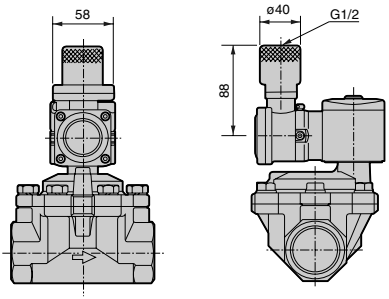


● Pressure proof packing seal (G1/2) connection type (flange type)
AD21E4 / AD22E4 -32F/40F/50F-** L, M

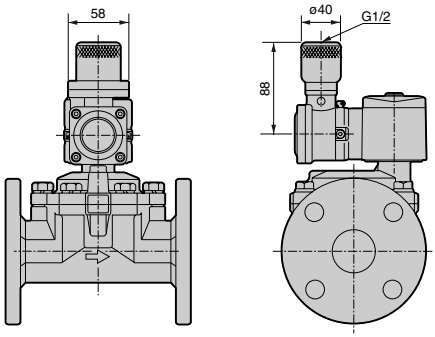


● Manual override (locking) (Rc screw-in type)
AD21E4-32A/40A/50A-*** A

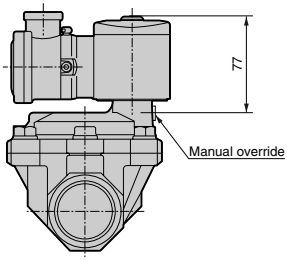


● Manual override (locking) (flange type)
AD21E4-32F/40F/50F-*** A

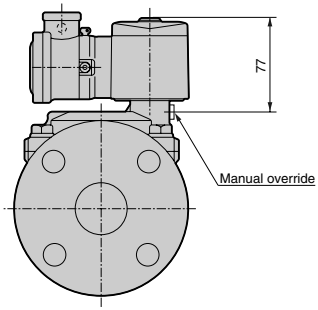

Explosion proof pilot kick type 2 port solenoid valve
(general purpose valve)

# ADK11E4/ADK12E4 Series

- Pressure and explosion proof structure d2G4 (flame-proof grade 2, ignitability G4)
- NC (normally closed) type, NO (normally open) type
- Port size: Rc1/2, Rc3/4, Rc1 ● Diaphragm structure

RoHS CAD

## JIS symbol

● ADK11E4:
NC (normally closed) type

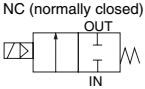


● ADK12E4:
NO (normally open) type

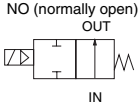


## Common specifications

| Model no. | ADK11E4/ADK12E4 |
|---|---|
| Working fluid | Air, low vacuum (1.33 x $10^3$ Pa), water, kerosene, oil (50 $mm^2$/s or less) |
| Working pressure differential range MPa | 0 to 1 (refer to max. working pressure differential in individual specifications.) |
| Max. working pressure MPa | 2 |
| Withstanding pressure (water) MPa | 4 |
| Fluid temperature ˚C | -10 to 60 (no freezing) |
| Ambient temperature ˚C | -10 to 50 |
| Heat proof class | B |
| Atmosphere | Outdoors/flammable etc. (flame-proof grade 1 to 2, ignitability G1 to G4) |
| Valve structure | Pilot kick type poppet, diaphragm structure |
| Valve seat leakage (Note 1) $cm^3$/min. (ANR) | 1 or less (air) |
| Mounting attitude | Free |

Note 1: For ADK11E4 (NC (normally closed) type), these values apply to pneumatic pressure 0.02 to 1 MPa, and for ADK12E4 (NO (normally open) type), these apply to pneumatic pressure 0.02 to 0.6 MPa.
When using at a pressure less than 0.02 MPa, the sealant may be unstable. Consult with CKD in this case.

## Individual specifications

| Item / Model no. | Port size | Orifice (mm) | Min. working pressure diff (MPa) | Max. working pressure diff. (MPa) Air AC | Air DC | Water, kerosene AC | Water, kerosene DC | Oil (50 $mm^2$/s) AC | Oil (50 $mm^2$/s) DC | Rated voltage | Apparent power (VA) Holding 50 Hz | Holding 60 Hz | Starting 50 Hz | Starting 60 Hz | Power consumption (W) AC 50/60 Hz | Power consumption (W) DC | Weight (kg) |
|---|---|---|---|---|---|---|---|---|---|---|---|---|---|---|---|---|---|
| NC (normally closed) type | | | | | | | | | | | | | | | | | |
| **ADK11E4-15A** | Rc1/2 | 16 | 0 | 1 | 0.6 | 1 | 0.6 | 0.6 | 0.5 | 100 VAC 50/60 Hz<br>110 VAC 60 Hz<br>200 VAC 50/60 Hz<br>220 VAC 60 Hz | 20 | 16 | 80 | 64 | 10/8.5 | 15 | 1.4 |
| **-20A** | Rc3/4 | 23 | | | | | | | | | | | | | | | 1.5 |
| **-25A** | Rc1 | 28 | | | | | | | | | | | | | | | 1.9 |
| NO (normally open) type | | | | | | | | | | | | | | | | | |
| **ADK12E4-15A** | Rc1/2 | 16 | 0 | 0.6 | 0.6 | 0.6 | 0.6 | 0.5 | 0.5 | 100 VAC 50/60 Hz<br>110 VAC 60 Hz<br>200 VAC 50/60 Hz<br>220 VAC 60 Hz | 25 | 21 | 100 | 84 | 12/10 | 15 | 1.5 |
| **-20A** | Rc3/4 | 23 | | | | | | | | | | | | | | | 1.7 |
| **-25A** | Rc1 | 28 | | | | | | | | | | | | | | | 2.1 |

*1: Refer to DC column for the maximum working pressure differential of coil with diode.
*2: Voltage fluctuation should be within -10 to +5% of the rated voltage.
*3: When using with a low vacuum, vacuum the OUT port side.

## Flow characteristics

| Model no. | Port size | Orifice (mm) | Flow characteristics C [$dm^3$/(s·bar)] | b | Cv flow factor | S ($mm^2$) |
|---|---|---|---|---|---|---|
| NC (normally closed) type | | | | | | |
| **ADK11E4-15A** | Rc1/2 | 16 | 20 | 0.31 | 4.5 | - |
| **-20A** | Rc3/4 | 23 | - | - | 8.6 | 162 |
| **-25A** | Rc1 | 28 | - | - | 12.0 | 231 |
| NO (normally open) type | | | | | | |
| **ADK12E4-15A** | Rc1/2 | 16 | 20 | 0.31 | 4.5 | - |
| **-20A** | Rc3/4 | 23 | - | - | 8.6 | 162 |
| **-25A** | Rc1 | 28 | - | - | 12.0 | 231 |

*1: Effective sectional area S and sonic conductance C are converted as S = 5.0 × C.

## How to order

**ADK1②E4 - 20A - 0 3 T - AC100V**

- Model no.
- Ⓐ Actuation
- Ⓑ Port size *2
- Ⓒ Body/sealant combination *3 *4
- Ⓓ Type of coil *5
- Ⓔ Junction box *6
- Ⓕ Voltage *8 *9

| Symbol | Descriptions | ADK11E4 | ADK12E4 |
|---|---|---|---|
| **Ⓐ Actuation** | | | |
| 1 | NC (normally closed) type | ● | |
| 2 | NO (normally open) type | | ● |
| **Ⓑ Port size** | | | |
| 15A | Rc1/2 | ● | ● |
| 20A | Rc3/4 | ● | ● |
| 25A | Rc1 | ● | ● |

**Ⓒ Body/sealant combination**

| | | Body | Sealant | Treatment | Treatment | | |
|---|---|---|---|---|---|---|---|
| 0 | Std. | Bronze | Nitrile rubber | - | Air, water, low vacuum, kerosene, oil (up to 60˚C) | ● | ● |
| B | Option | | Fluoro rubber | | - | ● | ● |
| D | | Stainless steel | Nitrile rubber | - | Air, water, low vacuum, kerosene, oil (up to 60˚C) | ● | ● |
| E | | | Fluoro rubber | | - | ● | ● |
| H | | Bronze | Nitrile rubber | Oil free | Air, water, low vacuum, kerosene, oil (up to 60˚C) | ● | ● |
| J | | | Fluoro rubber | | - | ● | ● |
| P | | | Ethylene propylene diene rubber | | - | ● | ● |
| L | | Stainless steel | Nitrile rubber | | Air, water, low vacuum, kerosene, oil (up to 60˚C) | ● | ● |
| M | | | Fluoro rubber | | - | ● | ● |
| R | | | Ethylene propylene diene rubber | | - | ● | ● |

Refer to page 36 in the Introduction for details on the material combinations.

| Symbol | Descriptions | ADK11E4 | ADK12E4 |
|---|---|---|---|
| **Ⓓ Type of coil** | | | |
| 3 | Heat proof class B explosion proof coil d2G4 | ● | ● |
| 5 | Heat proof class B diode integrated explosion proof coil d2G4 | ● | ● |
| **Ⓔ Junction box** | | | |
| T (Std.) | Conduit (G1/2) | ● | ● |
| L (Option) | Pressure proof packing seal (G1/2) connection, cable OD ø7.5 to 8.4 | ● | ● |
| M (Option) | Pressure proof packing seal (G1/2) connection, cable OD ø8.5 to 9.4 | ● | ● |
| **Ⓕ Voltage** | | | |
| AC100V | 100 VAC 50/60 Hz, 110 VAC 60 Hz | ● | ● |
| AC200V | 200 VAC 50/60 Hz, 220 VAC 60 Hz | ● | ● |

<Example of model number>

**ADK12E4-20A-03T-AC100V**
Series: ADK12E4

Ⓐ Actuation : NO (normally open) type
Ⓑ Port size : Rc3/4
Ⓒ Body/sealant combination
: Body - bronze, sealant - nitrile rubber
Ⓓ Type of coil : Heat proof class B explosion proof coil d2G4
Ⓔ Junction box : Conduit (G1/2)
Ⓕ Voltage : 100 VAC 50/60 Hz, 110 VAC 60 Hz

### ⚠ Note on model no. selection

*1: The combinations indicated with ● in the above table are available.
*2: G and NPT threads are used for piping port. Contact CKD for details.
*3: The maximum working pressure differential is 0.6 MPa for the ethylene propylene diene rubber seal combination (Ⓒ P/R).
*4: The ethylene propylene diene rubber seal combination (Ⓒ P/R) cannot be used with air. (Compressed air contains oil, and ethylene propylene diene rubber is not oil-resistant. )
*5: For the heat proof class B diode integrated coil, the AC power voltage is converted into a DC coil voltage by the diode.
*6: A pressure proof packing seal (G3/4) connection is also available. Contact CKD for more information. Note that the conduit connection (G3/4) is not available.
*7: Tropicalization (rust-proof coating) is available as a measure against rust. Contact CKD for more information.
*8: 100 VAC coil is compatible with 100 VAC 50/60 Hz and 110 VAC 60 Hz, and 200 VAC coil is compatible with 200 VAC 50/60 Hz and 220 VAC 60 Hz.
The heat proof class B diode integrated explosion proof coil (Ⓓ 5) can be used with 100 VAC 50/60 Hz or 200 VAC 50/60 Hz.
*9: Other voltages available are as follows. Contact CKD for more information.
12, 24, 48, 110, 115, 120, 220, 240, 380, 400, 415, 440, 480, 500 VAC
110, 220 VAC (with diode)
6, 12, 24, 48, 100, 110, 200, 220 VDC

## Internal structure and parts list

● ADK11E4 Series

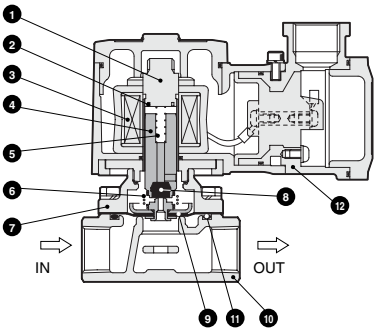


| No. | Parts name | Material | |
|---|---|---|---|
| 1 | Core assembly | SUS405 or equivalent, SUS316L, SUS403 | Stainless steel |
| 2 | Shading coil *1 | Cu (Ag for stainless steel body) | Copper (silver for stainless steel body) |
| 3 | Coil | —— | —— |
| 4 | Plunger assembly | SUS405 or equivalent, NBR (SUS405 or equivalent, FKM or EPDM) | Stainless steel |
| 5 | Plunger spring | SUS304 | Stainless steel |
| 6 | Kick spring | SUS304 | Stainless steel |
| 7 | Stuffing | C3771 (SCS13) | Brass (stainless steel casting) |
| 8 | Sealant | NBR (FKM, EPDM) | Nitrile rubber (fluoro rubber, ethylene propylene diene rubber) |
| 9 | Diaphragm assembly | SUS303, SUS304, NBR (SUS303, SUS304, FKM or EPDM) *3 | Stainless steel, nitrile rubber (stainless steel, fluoro rubber or ethylene propylene diene rubber) |
| 10 | Body | CAC408 (SCS13) | Bronze casting (stainless steel casting) |
| 11 | O ring | NBR (FKM, EPDM) | Nitrile rubber (fluoro rubber, ethylene propylene diene rubber) |
| 12 | Coil case | ADC12 | Aluminum die casting |

( ) shows options.
*1: When using the DC coil or a coil with diode, no shedding coil is used.

● ADK12E4 Series

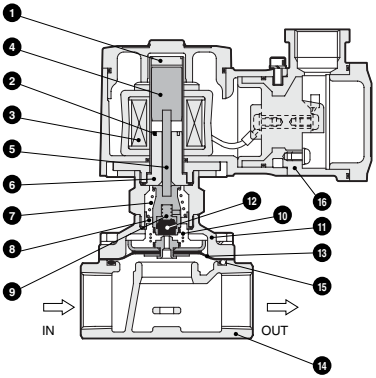


| No. | Parts name | Material | |
|---|---|---|---|
| 1 | Core assembly | SUS403, SUS316L, SUS304 *1 | Stainless steel |
| 2 | Shading coil *2 | Cu (Ag for stainless steel body) | Copper (silver for stainless steel body) |
| 3 | Coil | —— | —— |
| 4 | Plunger | SUS405 or equivalent | Stainless steel |
| 5 | Push rod | SUS304 | Stainless steel |
| 6 | Fixed ferrous core | SUS405 or equivalent | Stainless steel |
| 7 | Spring | SUS304 | Stainless steel |
| 8 | Spring holder | POM (SUS303) | Acetal resin (stainless steel) |
| 9 | NO valve assembly | SUS303, SUS304, NBR (SUS303, SUS304, FKM or EPDM) | Stainless steel, nitrile rubber (stainless steel, fluoro rubber or ethylene propylene diene rubber) |
| 10 | Kick spring | SUS304 | Stainless steel |
| 11 | Stuffing | C3771 (SCS13) | Brass (stainless steel casting) |
| 12 | Sealant | NBR (FKM, EPDM) | Nitrile rubber (fluoro rubber, ethylene propylene diene rubber) |
| 13 | Diaphragm assembly | SUS303, SUS304, NBR (SUS303, SUS304, FKM or EPDM) *3 | Stainless steel, nitrile rubber (stainless steel, fluoro rubber or ethylene propylene diene rubber) |
| 14 | Body | CAC408 (SCS13) | Bronze casting (stainless steel casting) |
| 15 | O ring | NBR (FKM, EPDM) | Nitrile rubber (fluoro rubber, ethylene propylene diene rubber) |
| 16 | Coil case | ADC12 | Aluminum die casting |

( ) shows options.
*1 When the body/sealant combination symbol is other than O and H, the material is SUS430, SUS316L, SUS304.
*2: When using the DC coil or a coil with diode, no shedding coil is used.

## Dimensions

● Conduit (G1/2) type
ADK11E4-15A/20A/25A-**T

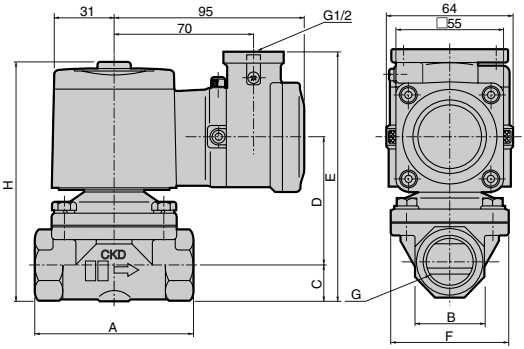


| Model no. | A | B | C | D | E | F | G | H |
|---|---|---|---|---|---|---|---|---|
| ADK11E4-15A-**T | 71 | 29 | 14.5 | 59 | 116.5 | 50 | Rc1/2 | 111.5 |
| ADK11E4-20A-**T | 80 | 35 | 17.5 | 62.5 | 123 | 60 | Rc3/4 | 118 |
| ADK11E4-25A-**T | 90 | 45 | 22.5 | 68 | 133.5 | 71 | Rc1 | 128.5 |

● Conduit (G1/2) type
ADK12E4-15A/20A/25A-**T

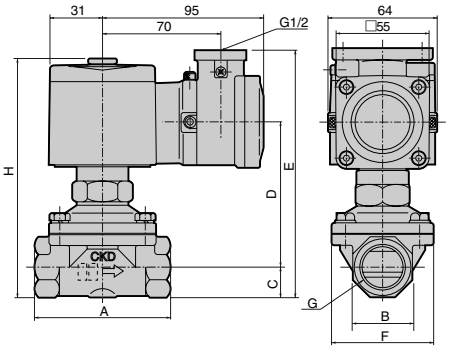


| Model no. | A | B | C | D | E | F | G | H |
|---|---|---|---|---|---|---|---|---|
| ADK12E4-15A-**T | 71 | 29 | 14.5 | 79.5 | 137 | 50 | Rc1/2 | 132 |
| ADK12E4-20A-**T | 80 | 35 | 17.5 | 83 | 143.5 | 60 | Rc3/4 | 138.5 |
| ADK12E4-25A-**T | 90 | 45 | 22.5 | 88.5 | 154 | 71 | Rc1 | 149 |

## Optional dimensions

● Pressure proof packing seal (G1/2) connection type
ADK11E4-15A/20A/25A-** L, M

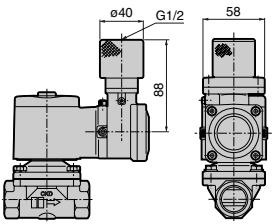


● Pressure proof packing seal (G1/2) connection type
ADK12E4-15A/20A/25A-** L, M

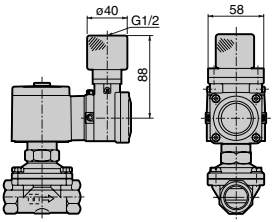

## Electronic catalog file list

### Explosion proof general purpose 2, 3 port solenoid valve (general purpose valve)

Direct acting 2 port valve AB4*E (d2G4/d2G2)

Electronic Catalog file list is applied to "CAD DATA 2006".

| Model no. | DXF | | MICRO CADAM |
|---|---|---|---|
| | Folder name | Filename | Filename (GROUP: CAD, USER: STDLIB) |
| ● AB41E4/42E4: page 364, AB41E2: pages 396 to 397 | | | |
| AB41E*-1/4 | AB_E | ab41e__1_4 | CKD-AB41E*-1/4 |
| AB41E*-1/4 3/8 | | ab41e__1_4_3_8 | CKD-AB41E*-1/4 3/8 |
| AB41E*-A-1/4 | | ab41e__a_1_4 | CKD-AB41E*-A-1/4 |
| AB41E*-A-1/4 3/8 | | ab41e__a_1_4_3_8 | CKD-AB41E*-A-1/4 3/8 |
| AB42E4-1/4 | | ab42e4_1_4 | CKD-AB42E4-1/4 |
| AB42E4-1/4 3/8 | | ab42e4_1_4_3_8 | CKD-AB42E4-1/4 3/8 |
| Accessory (mounting plate, manual mounting plate) | | a_e_f | CKD-A*E-F |

Direct acting 3 port valve AG4*E (d2G4)

| Model no. | DXF | | MICRO CADAM |
|---|---|---|---|
| | Folder name | Filename | Filename (GROUP: CAD, USER: STDLIB) |
| ● AG41E4/43E4/44E4: page 369 | | | |
| AG4*E4-1/4 | AG_E | ag4_e4_1_4 | CKD-AG4*E4-1/4 |
| AG4*E4-3/8 | | ag4_e4_3_8 | CKD-AG4*E4-3/8 |
| AG4*E4-A-1/4 | | ag4_e4_a_1_4 | CKD-AG4*E4-A-1/4 |
| AG4*E4-A-3/8 | | ag4_e4_a_3_8 | CKD-AG4*E4-A-3/8 |
| Accessory (mounting plate, manual mounting plate) | | a_e_f | CKD-A*E-F |

## Electronic catalog file list

### Pilot operated 2 port valve piston structure (d2G4/d2G2)

Electronic Catalog file list is applied to "CAD DATA 2006".

| Model no. | DXF | | MICRO CADAM |
|---|---|---|---|
| | Folder name | Filename | Filename (GROUP: CAD, USER: STDLIB) |
| ● AP11E4/12E4: page 373, AP11E2/12E2: page 401 | | | |
| AP11E*-15A | AP1_E | ap11e__15a | CKD-AP11E*-15A |
| AP11E*-20A | | ap11e__20a | CKD-AP11E*-20A |
| AP11E*-25A | | ap11e__ 25a | CKD-AP11E*-25A |
| AP11E*-32A | | ap11e__32a | CKD-AP11E*-32A |
| AP11E*-32F | | ap11e__32f | CKD-AP11E*-32F |
| AP11E*-40A | | ap11e__40a | CKD-AP11E*-40A |
| AP11E*-40F | | ap11e__40f | CKD-AP11E*-40F |
| AP11E*-50A | | ap11e__50a | CKD-AP11E*-50A |
| AP11E*-50F | | ap11e__50f | CKD-AP11E*-50F |
| AP11E*-15A-A | | ap11e__15a_a | CKD-AP11E*-15A-A |
| AP11E*-20A-A | | ap11e__20a_a | CKD-AP11E*-20A-A |
| AP11E*-25A-A | | ap11e__25a_a | CKD-AP11E*-25A-A |
| AP11E*-32A-A | | ap11e__32a_a | CKD-AP11E*-32A-A |
| AP11E*-32F-A | | ap11e__32f_a | CKD-AP11E*-32F-A |
| AP11E*-40A-A | | ap11e__40a_a | CKD-AP11E*-40A-A |
| AP11E*-40F-A | | ap11e__40f_a | CKD-AP11E*-40F-A |
| AP11E*-50A-A | | ap11e__50a_a | CKD-AP11E*-50A-A |
| AP11E*-50F-A | | ap11e__50f_a | CKD-AP11E*-50F-A |
| AP12E*-15A | | ap12e__15a | CKD-AP12E*-15A |
| AP12E*-20A | | ap12e__20a | CKD-AP12E*-20A |
| AP12E*-25A | | ap12e__25a | CKD-AP12E*-25A |
| AP12E*-32A | | ap12e__32a | CKD-AP12E*-32A |
| AP12E*-32F | | ap12e__32f | CKD-AP12E*-32F |
| AP12E*-40A | | ap12e__40a | CKD-AP12E*-40A |
| AP12E*-40F | | ap12e__40f | CKD-AP12E*-40F |
| AP12E*-50A | | ap12e__50a | CKD-AP12E*-50A |
| AP12E*-50F | | ap12e__50f | CKD-AP12E*-50F |
| Accessory (mounting plate, manual mounting plate) | | a_e_f | CKD-A*E-F |
| ● AP21E4/22E4: pages 378 to 379, AP21E2/22E2: pages 406 to 407 | | | |
| AP21E*-32A | AP2_E | ap21e__32a | CKD-AP21E*-32A |
| AP21E*-32F | | ap21e__32f | CKD-AP21E*-32F |
| AP21E*-40A | | ap21e__40a | CKD-AP21E*-40A |
| AP21E*-40F | | ap21e__40f | CKD-AP21E*-40F |
| AP21E*-50A | | ap21e__50a | CKD-AP21E*-50A |
| AP21E*-50F | | ap21e__50f | CKD-AP21E*-50F |
| AP21E*-32A-A | | ap21e__32a_a | CKD-AP21E*-32A-A |
| AP21E*-32F-A | | ap21e__32f_a | CKD-AP21E*-32F-A |
| AP21E*-40A-A | | ap21e__40a_a | CKD-AP21E*-40A-A |
| AP21E*-40F-A | | ap21e__40f_a | CKD-AP21E*-40F-A |
| AP21E*-50A-A | | ap21e__50a_a | CKD-AP21E*-50A-A |
| AP21E*-50F-A | | ap21e__50f_a | CKD-AP21E*-50F-A |
| AP22E*-32A | | ap22e__32a | CKD-AP22E*-32A |
| AP22E*-32F | | ap22e__32f | CKD-AP22E*-32F |
| AP22E*-40A | | ap22e__40a | CKD-AP22E*-40A |
| AP22E*-40F | | ap22e__40f | CKD-AP22E*-40F |
| AP22E*-50A | | ap22e__50a | CKD-AP22E*-50A |
| AP22E*-50F | | ap22e__50f | CKD-AP22E*-50F |
| Accessory (mounting plate, manual mounting plate) | | a_e_f | CKD-A*E-F |

## Electronic catalog file list

### Pilot operated 2 port valve diaphragm structure

Electronic Catalog file list is applied to "CAD DATA 2006".

| Model no. | DXF | | MICRO CADAM |
|---|---|---|---|
| | Folder name | Filename | Filename (GROUP: CAD, USER: STDLIB) |
| ● AD11E4/12E4: page 383 | | | |
| AD11E4-15A | AD1_E | ad11e4_15a | CKD-AD11E4-15A |
| AD11E4-20A | | ad11e4_20a | CKD-AD11E4-20A |
| AD11E4-25A | | ad11e4_25a | CKD-AD11E4-25A |
| AD11E4-32A | | ad11e4_32a | CKD-AD11E4-32A |
| AD11E4-32F | | ad11e4_32f | CKD-AD11E4-32F |
| AD11E4-40A | | ad11e4_40a | CKD-AD11E4-40A |
| AD11E4-40F | | ad11e4_40f | CKD-AD11E4-40F |
| AD11E4-50A | | ad11e4_50a | CKD-AD11E4-50A |
| AD11E4-50F | | ad11e4_50f | CKD-AD11E4-50F |
| AD11E4-15A-A | | ad11e4_15a_a | CKD-AD11E4-15A-A |
| AD11E4-20A-A | | ad11e4_20a_a | CKD-AD11E4-20A-A |
| AD11E4-25A-A | | ad11e4_25a_a | CKD-AD11E4-25A-A |
| AD11E4-32A-A | | ad11e4_32a_a | CKD-AD11E4-32A-A |
| AD11E4-32F-A | | ad11e4_32f_a | CKD-AD11E4-32F-A |
| AD11E4-40A-A | | ad11e4_40a_a | CKD-AD11E4-40A-A |
| AD11E4-40F-A | | ad11e4_40f_a | CKD-AD11E4-40F-A |
| AD11E4-50A-A | | ad11e4_50a_a | CKD-AD11E4-50A-A |
| AD11E4-50F-A | | ad11e4_50f_a | CKD-AD11E4-50F-A |
| AD12E4-15A | | ad12e4_15a | CKD-AD12E4-15A |
| AD12E4-20A | | ad12e4_20a | CKD-AD12E4-20A |
| AD12E4-25A | | ad12e4_25a | CKD-AD12E4-25A |
| AD12E4-32A | | ad12e4_32a | CKD-AD12E4-32A |
| AD12E4-32F | | ad12e4_32f | CKD-AD12E4-32F |
| AD12E4-40A | | ad12e4_40a | CKD-AD12E4-40A |
| AD12E4-40F | | ad12e4_40f | CKD-AD12E4-40F |
| AD12E4-50A | | ad12e4_50a | CKD-AD12E4-50A |
| AD12E4-50F | | ad12e4_50f | CKD-AD12E4-50F |
| Accessory (mounting plate, manual mounting plate) | | a_e_f | CKD-A*E-F |
| ● AD21E4/22E4: pages 388 to 389 | | | |
| AD21E4-32A | AD2_E | ad21e4_32a | CKD-AD21E4-32A |
| AD21E4-32F | | ad21e4_32f | CKD-AD21E4-32F |
| AD21E4-40A | | ad21e4_40a | CKD-AD21E4-40A |
| AD21E4-40F | | ad21e4_40f | CKD-AD21E4-40F |
| AD21E4-50A | | ad21e4_50a | CKD-AD21E4-50A |
| AD21E4-50F | | ad21e4_50f | CKD-AD21E4-50F |
| AD21E4-32A-A | | ad21e4_32a_a | CKD-AD21E4-32A-A |
| AD21E4-32F-A | | ad21e4_32f_a | CKD-AD21E4-32F-A |
| AD21E4-40A-A | | ad21e4_40a_a | CKD-AD21E4-40A-A |
| AD21E4-40F-A | | ad21e4_40f_a | CKD-AD21E4-40F-A |
| AD21E4-50A-A | | ad21e4_50a_a | CKD-AD21E4-50A-A |
| AD21E4-50F-A | | ad21e4_50f_a | CKD-AD21E4-50F-A |
| AD22E4-32A | | ad22e4_32a | CKD-AD22E4-32A |
| AD22E4-32F | | ad22e4_32f | CKD-AD22E4-32F |
| AD22E4-40A | | ad22e4_40a | CKD-AD22E4-40A |
| AD22E4-40F | | ad22e4_40f | CKD-AD22E4-40F |
| AD22E4-50A | | ad22e4_50a | CKD-AD22E4-50A |
| AD22E4-50F | | ad22e4_50f | CKD-AD22E4-50F |
| Accessory (mounting plate, manual mounting plate) | | a_e_f | CKD-A*E-F |

## Electronic catalog file list

### Pilot kick type 2 port solenoid valve diaphragm structure (d2G4)

Electronic Catalog file list is applied to "CAD DATA 2006".

| Model no. | DXF | | MICRO CADAM |
|---|---|---|---|
| | Folder name | Filename | Filename (GROUP: CAD, USER: STDLIB) |
| ● ADK11E4/12E4: page 393 | | | |
| ADK11E4-15A | ADK_E | adk11e4_15a | CKD-ADK11E4-15A |
| ADK11E4-20A | | adk11e4_20a | CKD-ADK11E4-20A |
| ADK11E4-25A | | adk11e4_25a | CKD-ADK11E4-25A |
| ADK12E4-15A | | adk12e4_15a | CKD-ADK12E4-15A |
| ADK12E4-20A | | adk12e4_20a | CKD-ADK12E4-20A |
| ADK12E4-25A | | adk12e4_25a | CKD-ADK12E4-25A |
| Accessory (mounting plate, manual mounting plate) | | a_e_f | CKD-A*E-F |